Series CON-MP with cable

AVENTICS™

AVENTICS Series CON-MP
Multipole plugs with cable

EMERSON™

AVENTICS Series CON-MP Multipole plugs with cable

The AVENTICS Series CON-MP-with cable offers cables with a multipol plug like D-SUB with various numbers of pins and different length, optimized for our focused valve system Series like AV Also C/2 connectors for Valve systems of Series CL03 are available.

- Multipole plug connectors with connected cable
- Valve system control, D-Sub plug

Product overview

Page

M23, 19-pin
Round plug connector, Series CON-RD 4

D-Sub 25-pin
Multipole plug, series CON-MP 5
D-Sub socket, 25 pin straight
Multipole plug, series CON-MP 7
D-Sub socket, 25 pin angled
Multipole plug, series CON-MP 9
D-Sub socket, 25 pin straight Compact design
Multipole plug, series CON-MP 12
D-Sub socket, 25 pin angled Compact design
Multipole plug, series CON-MP 14
D-Sub socket, 25 pin angled metal
Multipole plug, series CON-MP 16
D-Sub socket, 25 pin D-Sub plug, 25 pin Angled/straight
Multipole plug, series CON-MP 18
D-Sub plug, 25 pin D-Sub socket, 25 pin Angled/straight

D-Sub 44-pin
Multipole plug, series CON-MP 20
D-Sub socket, 44 pin straight Compact design
Multipole plug, series CON-MP 23
D-Sub socket, 44 pin angled Compact design

C/2
Multipole plug, series CON-MP 26

Round plug connector, Series CON-RD

Electrical connection 1, type: Socket
Electrical connection 1, thread size: M23x1
Electrical connection 1, number of poles: 19-pin

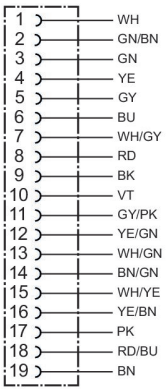

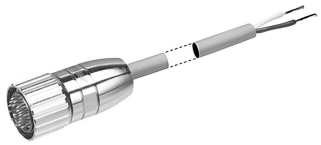

Shielding	Electrical connection 1, type	Electrical connection 1, thread size	Electrical connection 1, coding	Electrical connection 2, type	Cable length [m]	Part No.
unshielded	Socket	M23x1	A-coded	open cable ends	5	R412012457

Dimensions

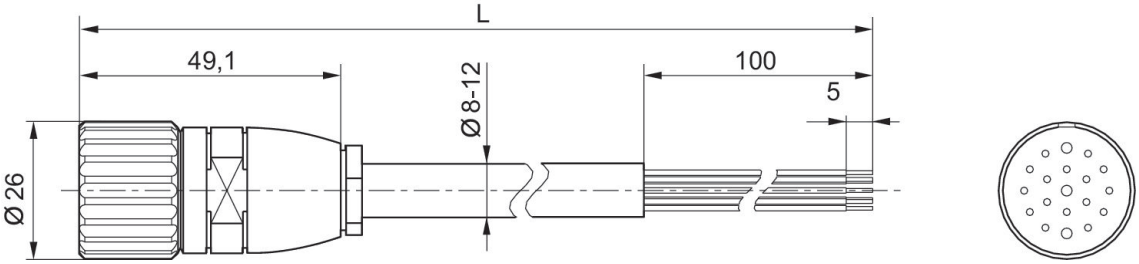

R412012457

Pin assignment, socket

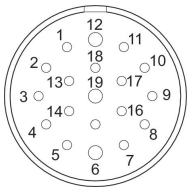

(1) WH=white (2) GN/BN=green/brown (3) GN=green (4) YE=yellow (5) GY=gray (6) BU=blue (7) WH/GY=white/gray (8) RD=red (9) BK=black (10) VT=violet (11) GY/PK=gray/pink (12) YE/GN=yellow/green (13) WH/GN=white/green (14) BN/GN=brown/green (15) WH/YE=white/yellow (16) YE/BN=yellow/brown (17) PK=pink (18) RD/BU=red/blue (19) BN=brown

Multipole plug, series CON-MP

Electrical connection 1, type: Socket
Electrical connection 1, thread size: D-Sub
Electrical connection 1, number of poles: 25-pin
Min. ambient temperature: -5 °C
Max. ambient temperature: 50 °C

Operational voltage	Current [A]	Shielding	Electrical connection 1, type	Electrical connection 1, thread size	Electrical connection 2, type	Cable length [m]	Cable-Ø [mm]	Wire cross-section [mm²]	Suitable for dynamic laying	Material cable sheath	Part No.
24 V DC	3	unshielded	Socket	D-Sub	open cable ends	3	11.2	0.34		Polyvinyl chloride	R412011244
24 V DC	3	unshielded	Socket	D-Sub	open cable ends	5	11.2	0.34		Polyvinyl chloride	R412011245
24 V DC	3	unshielded	Socket	D-Sub	open cable ends	10	11.2	0.34		Polyvinyl chloride	R412011246
24 V DC	3	unshielded	Socket	D-Sub	open cable ends	3	12	0.34	suitable for dynamic laying	Polyurethane	R412011252
24 V DC	3	unshielded	Socket	D-Sub	open cable ends	5	12	0.34	suitable for dynamic laying	Polyurethane	R412011253
24 V DC	3	unshielded	Socket	D-Sub	open cable ends	10	12	0.34	suitable for dynamic laying	Polyurethane	R412011254

Dimensions

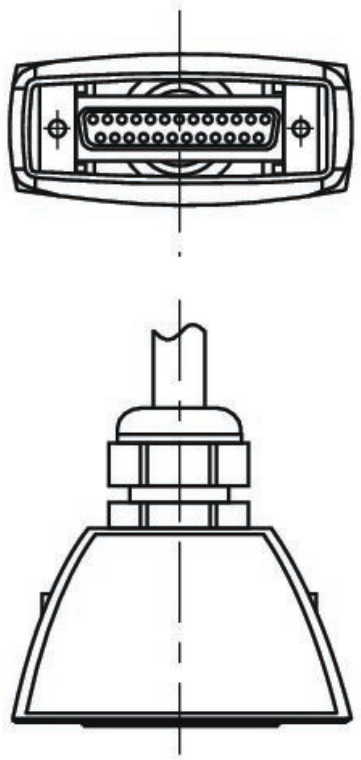

D-Sub socket, 25 pin

Pin	1	2	3	4	5	6	7	8	9
Color	white	brown	green	yellow	gray	pink	blue	red	black

Pin	10	11	12	13	14	15	16	17	18
Color	violet	gray/pink	red/blue	white/green	brown/green	white/yellow	yellow/brown	white/gray	gray/brown

Pin	19	20	21	22	23	24	25
Color	white/pink	pink/brown	white/blue	brown/blue	white/red	brown/red	white/black

R412011244, R412011245, R412011246, R412011252, R412011253, R412011254

PIN assignment and cable colors

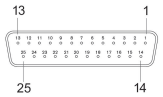

Socket

Multipole plug, series CON-MP

Electrical connection 1, type: Socket
Electrical connection 1, thread size: D-Sub
Electrical connection 1, number of poles: 25-pin
Min. ambient temperature: -5 °C
Max. ambient temperature: 50 °C

Operational voltage	Current [A]	Shielding	Electrical connection 1, type	Electrical connection 1, thread size	Electrical connection 2, type	Cable length [m]	Cable-Ø [mm]	Wire cross-section [mm²]	Suitable for dynamic laying	Material cable sheath	Part No.
24 V DC	3	unshielded	Socket	D-Sub	open cable ends	3	11.2	0.34		Polyvinyl chloride	R412011248
24 V DC	3	unshielded	Socket	D-Sub	open cable ends	5	11.2	0.34		Polyvinyl chloride	R412011249
24 V DC	3	unshielded	Socket	D-Sub	open cable ends	10	11.2	0.34		Polyvinyl chloride	R412011250
24 V DC	3	unshielded	Socket	D-Sub	open cable ends	3	12	0.34	suitable for dynamic laying	Polyurethane	R412011256
24 V DC	3	unshielded	Socket	D-Sub	open cable ends	5	12	0.34	suitable for dynamic laying	Polyurethane	R412011257
24 V DC	3	unshielded	Socket	D-Sub	open cable ends	10	12	0.34	suitable for dynamic laying	Polyurethane	R412011258

Dimensions

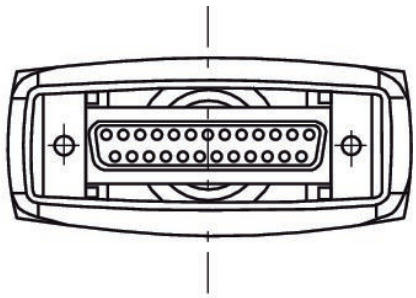

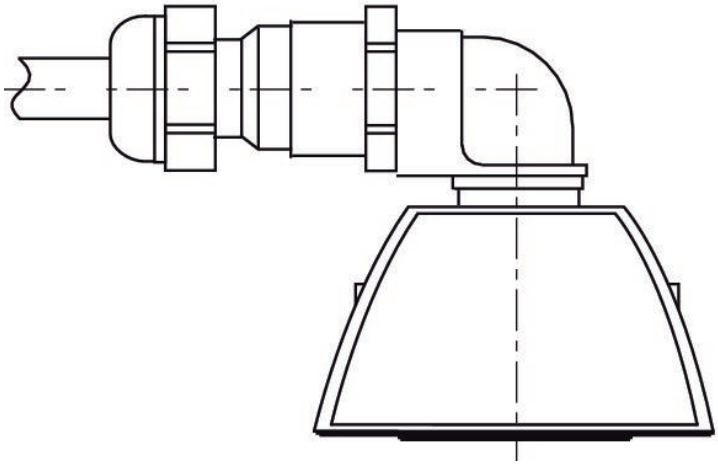

D-Sub socket, 25 pin

Pin	1	2	3	4	5	6	7	8	9
Color	white	brown	green	yellow	gray	pink	blue	red	black

Pin	10	11	12	13	14	15	16	17	18
Color	violet	gray/pink	red/blue	white/green	brown/green	white/yellow	yellow/brown	white/gray	gray/brown

Pin	19	20	21	22	23	24	25
Color	white/pink	pink/brown	white/blue	brown/blue	white/red	brown/red	white/black

R412011248, R412011249, R412011250, R412011256, R412011257, R412011258

PIN assignment and cable colors

Socket

Multipole plug, series CON-MP

Electrical connection 1, type: Socket
Electrical connection 1, thread size: D-Sub
Electrical connection 1, number of poles: 25-pin
Min. ambient temperature: -20 °C
Max. ambient temperature: 80 °C

Operational voltage	Current [A]	Shielding	Electrical connection 1, type	Electrical connection 1, thread size	Electrical connection 2, type	Cable length [m]	Cable-Ø [mm]	Wire cross-section [mm²]	Suitable for dynamic laying	Material cable sheath	Part No.
24 V DC	3	unshielded	Socket	D-Sub	open cable ends	3	8.5	0.22		Polyvinyl chloride	R419500454
24 V DC	3	unshielded	Socket	D-Sub	open cable ends	5	8.5	0.22		Polyvinyl chloride	R419500455
24 V DC	3	unshielded	Socket	D-Sub	open cable ends	10	8.5	0.22		Polyvinyl chloride	R419500456
24 V DC	3	unshielded	Socket	D-Sub	open cable ends	15	8.5	0.22		Polyvinyl chloride	R412022156
24 V DC	3	unshielded	Socket	D-Sub	open cable ends	3	10.5	0.22	suitable for dynamic laying	Polyurethane	R419500457
24 V DC	3	unshielded	Socket	D-Sub	open cable ends	5	10.5	0.22	suitable for dynamic laying	Polyurethane	R419500458
24 V DC	3	unshielded	Socket	D-Sub	open cable ends	10	10.5	0.22	suitable for dynamic laying	Polyurethane	R419500459

Dimensions

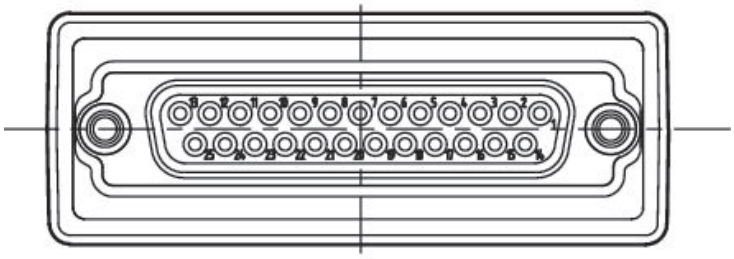

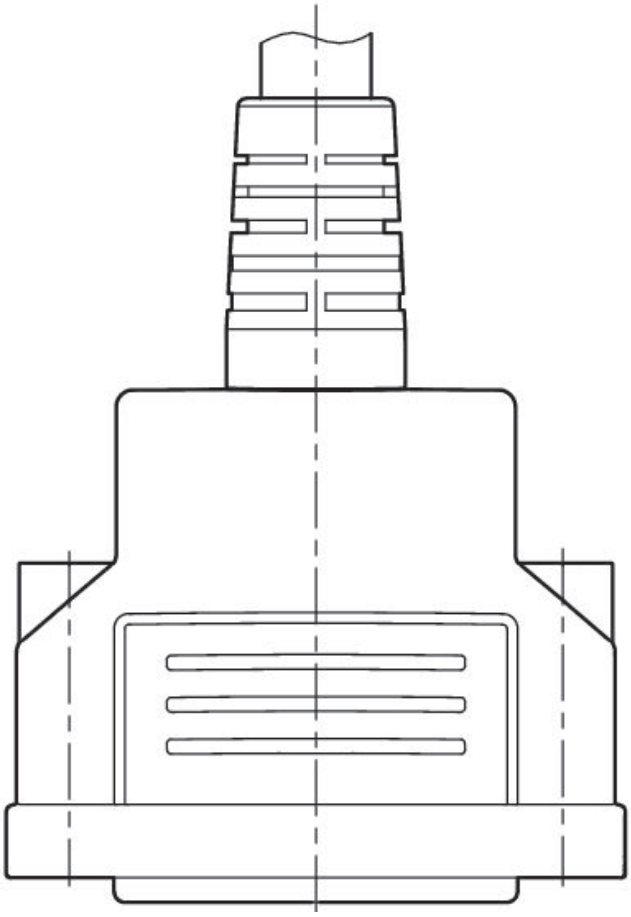

D-Sub socket, 25 pin

Pin	1	2	3	4	5	6	7	8	9
Color	white	brown	green	yellow	gray	pink	blue	red	black

Pin	10	11	12	13	14	15	16	17	18
Color	violet	gray/pink	red/blue	white/green	brown/green	white/yellow	yellow/brown	white/gray	gray/brown

Pin	19	20	21	22	23	24	25
Color	white/pink	pink/brown	white/blue	brown/blue	white/red	brown/red	white/black

R419500454, R419500455, R419500456, R412022156, R419500457, R419500458, R419500459

PIN assignment and cable colors

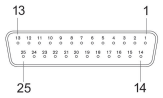

Socket

Multipole plug, series CON-MP

Electrical connection 1, type: Socket
Electrical connection 1, thread size: D-Sub
Electrical connection 1, number of poles: 25-pin
Min. ambient temperature: -20 °C
Max. ambient temperature: 80 °C

Operational voltage	Current [A]	Shielding	Electrical connection 1, type	Electrical connection 1, thread size	Electrical connection 2, type	Cable length [m]	Cable-Ø [mm]	Wire cross-section [mm²]	Suitable for dynamic laying	Material cable sheath	Part No.
24 V DC	3	unshielded	Socket	D-Sub	open cable ends	3	8.5	0.22		Polyvinyl chloride	R419500460
24 V DC	3	unshielded	Socket	D-Sub	open cable ends	5	8.5	0.22		Polyvinyl chloride	R419500461
24 V DC	3	unshielded	Socket	D-Sub	open cable ends	10	8.5	0.22		Polyvinyl chloride	R419500462
24 V DC	3	unshielded	Socket	D-Sub	open cable ends	15	8.5	0.22		Polyvinyl chloride	R412022352
24 V DC	3	unshielded	Socket	D-Sub	open cable ends	3	10.5	0.22	suitable for dynamic laying	Polyurethane	R419500463
24 V DC	3	unshielded	Socket	D-Sub	open cable ends	5	10.5	0.22	suitable for dynamic laying	Polyurethane	R419500464
24 V DC	3	unshielded	Socket	D-Sub	open cable ends	10	10.5	0.22	suitable for dynamic laying	Polyurethane	R419500465

Dimensions

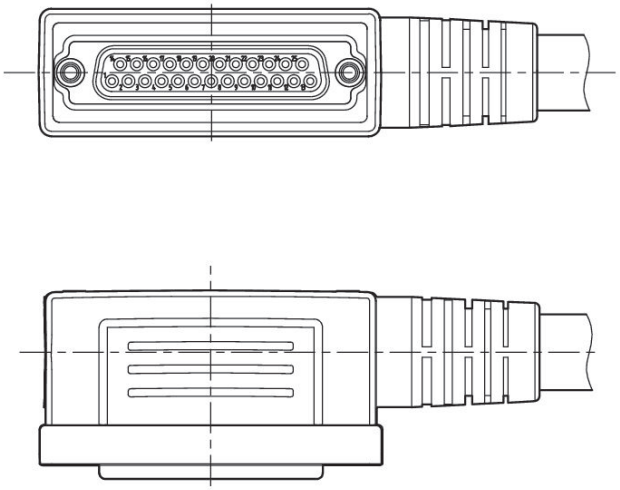

D-Sub socket, 25 pin

Pin	1	2	3	4	5	6	7	8	9
Color	white	brown	green	yellow	gray	pink	blue	red	black

Pin	10	11	12	13	14	15	16	17	18
Color	violet	gray/pink	red/blue	white/green	brown/green	white/yellow	yellow/brown	white/gray	gray/brown

Pin	19	20	21	22	23	24	25
Color	white/pink	pink/brown	white/blue	brown/blue	white/red	brown/red	white/black

R419500460, R419500461, R419500462, R412022352, R419500463, R419500464, R419500465

PIN assignment and cable colors

Socket

Multipole plug, series CON-MP

Electrical connection 1, type: Socket
Electrical connection 1, thread size: D-Sub
Electrical connection 1, number of poles: 25-pin
Min. ambient temperature: -5 °C
Max. ambient temperature: 50 °C

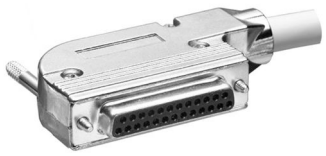

Operational voltage	Current [A]	Shielding	Electrical connection 1, type	Electrical connection 1, thread size	Electrical connection 2, type	Cable length [m]	Cable-Ø [mm]	Wire cross-section [mm²]	Suitable for dynamic laying	Material cable sheath	Part No.
24 V DC	3	unshielded	Socket	D-Sub	open cable ends	3	10.1	0.25	suitable for dynamic laying	Polyvinyl chloride	R402000782
24 V DC	3	unshielded	Socket	D-Sub	open cable ends	10	10.1	0.25	suitable for dynamic laying	Polyvinyl chloride	R402000783

Dimensions

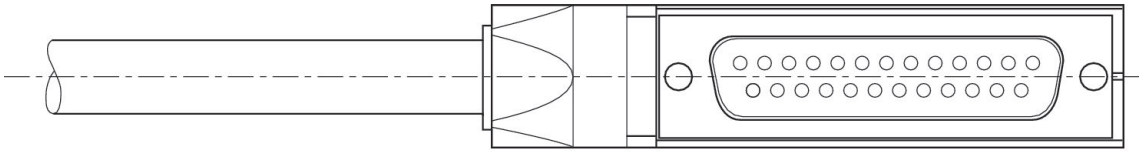

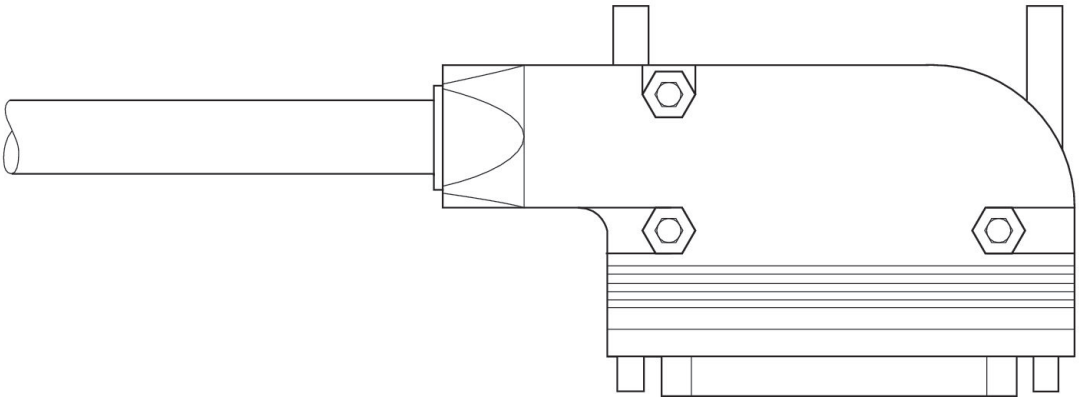

D-Sub socket, 25 pin

Pin	1	2	3	4	5	6	7	8	9
Color	white	brown	green	yellow	gray	pink	blue	red	black

Pin	10	11	12	13	14	15	16	17	18
Color	violet	gray/pink	red/blue	white/green	brown/green	white/yellow	yellow/brown	white/gray	gray/brown

Pin	19	20	21	22	23	24	25
Color	white/pink	pink/brown	white/blue	brown/blue	white/red	brown/red	white/black

R402000782, R402000783

PIN assignment and cable colors

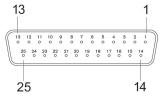

Socket

Multipole plug, series CON-MP

Electrical connection 1, type: Plug
Electrical connection 1, thread size: D-Sub
Electrical connection 1, number of poles: 25-pin
Min. ambient temperature: -5 °C
Max. ambient temperature: 50 °C

Operational voltage	Current [A]	Shielding	Electrical connection 1, type	Electrical connection 1, thread size	Electrical connection 2, type	Electrical connection 2, thread size	Cable length [m]	Cable-Ø [mm]	Wire cross-section [mm²]	Material cable sheath	Part No.
24 V DC	3	unshielded	Plug	D-Sub	Socket	D-Sub	0.5	8.5	0.2	Polyvinyl chloride	R412020630
24 V DC	3	unshielded	Plug	D-Sub	Socket	D-Sub	1	8.5	0.2	Polyvinyl chloride	R412020631
24 V DC	3	unshielded	Plug	D-Sub	Socket	D-Sub	2	8.5	0.2	Polyvinyl chloride	R412020632
24 V DC	3	unshielded	Plug	D-Sub	Socket	D-Sub	5	8.5	0.2	Polyvinyl chloride	R412020633
24 V DC	3	unshielded	Plug	D-Sub	Socket	D-Sub	10	8.5	0.2	Polyvinyl chloride	R412020634

Dimensions

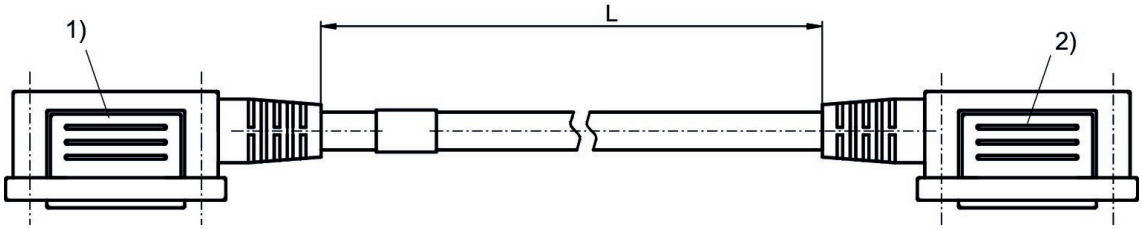

1) Port 1 (Plug)
2) Port 2 (Socket)

D-Sub plug, 25-pin

Pin	1	2	3	4	5	6	7	8	9
Color	white	brown	green	yellow	gray	pink	blue	red	black

Pin	10	11	12	13	14	15	16	17	18
Color	violet	gray/pink	red/blue	white/green	brown/green	white/yellow	yellow/brown	white/gray	gray/brown

Pin	19	20	21	22	23	24	25
Color	white/pink	pink/brown	white/blue	brown/blue	white/red	brown/red	white/black

R412020630, R412020631, R412020632, R412020633, R412020634

PIN assignment and cable colors

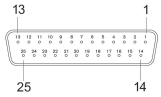

Socket

R412020630, R412020631, R412020632, R412020633, R412020634

PIN assignment and cable colors

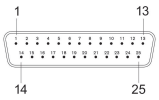

Plug

Multipole plug, series CON-MP

Electrical connection 1, type: Plug
Electrical connection 1, thread size: D-Sub
Electrical connection 1, number of poles: 25-pin
Min. ambient temperature: -5 °C
Max. ambient temperature: 50 °C

Operational voltage	Current [A]	Shielding	Electrical connection 1, type	Electrical connection 1, thread size	Electrical connection 2, type	Electrical connection 2, thread size	Cable length [m]	Cable-Ø [mm]	Wire cross-section [mm²]	Material cable sheath	Part No.
24 V DC	3	unshielded	Plug	D-Sub	Socket	D-Sub	0.5	8.5	0.2	Polyvinyl chloride	R412020635
24 V DC	3	unshielded	Plug	D-Sub	Socket	D-Sub	1	8.5	0.2	Polyvinyl chloride	R412020636
24 V DC	3	unshielded	Plug	D-Sub	Socket	D-Sub	2	8.5	0.2	Polyvinyl chloride	R412020637
24 V DC	3	unshielded	Plug	D-Sub	Socket	D-Sub	5	8.5	0.2	Polyvinyl chloride	R412020638
24 V DC	3	unshielded	Plug	D-Sub	Socket	D-Sub	10	8.5	0.2	Polyvinyl chloride	R412020639

Dimensions

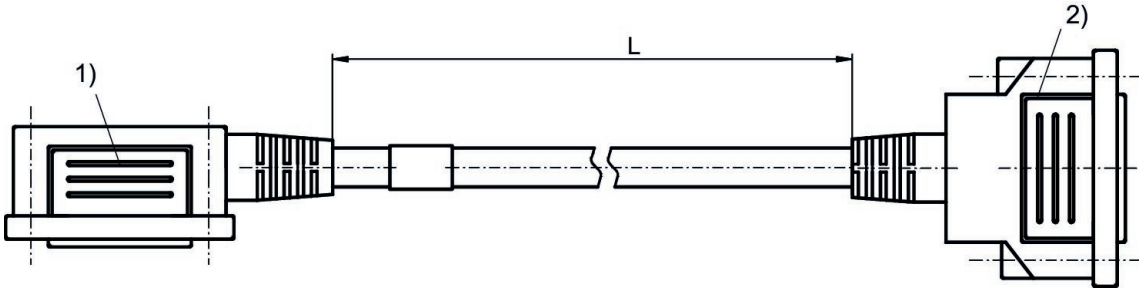

1) Port 1 (Plug)
2) Port 2 (Socket)

D-Sub plug, 25-pin

Pin	1	2	3	4	5	6	7	8	9
Color	white	brown	green	yellow	gray	pink	blue	red	black

Pin	10	11	12	13	14	15	16	17	18
Color	violet	gray/pink	red/blue	white/green	brown/green	white/yellow	yellow/brown	white/gray	gray/brown

Pin	19	20	21	22	23	24	25
Color	white/pink	pink/brown	white/blue	brown/blue	white/red	brown/red	white/black

R412020635, R412020636, R412020637, R412020638, R412020639

PIN assignment and cable colors

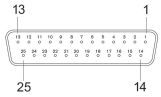

Socket

R412020635, R412020636, R412020637, R412020638, R412020639

PIN assignment and cable colors

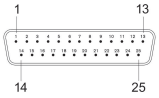

Plug

Multipole plug, series CON-MP

Electrical connection 1, type: Socket
Electrical connection 1, thread size: D-Sub
Electrical connection 1, number of poles: 44-pin
Min. ambient temperature: -20 °C
Max. ambient temperature: 80 °C

Operational voltage	Current [A]	Shielding	Electrical connection 1, type	Electrical connection 1, thread size	Electrical connection 2, type	Cable length [m]	Cable-Ø [mm]	Wire cross-section [mm²]	Suitable for dynamic laying	Material cable sheath	Part No.
24 V DC	3	unshielded	Socket	D-Sub	open cable ends	3	10.7	0.22		Polyvinyl chloride	R419500466
24 V DC	3	unshielded	Socket	D-Sub	open cable ends	5	10.7	0.22		Polyvinyl chloride	R419500467
24 V DC	3	unshielded	Socket	D-Sub	open cable ends	10	10.7	0.22		Polyvinyl chloride	R419500468
24 V DC	3	unshielded	Socket	D-Sub	open cable ends	3	13	0.22	suitable for dynamic laying	Polyurethane	R419500469
24 V DC	3	unshielded	Socket	D-Sub	open cable ends	5	13	0.22	suitable for dynamic laying	Polyurethane	R419500470
24 V DC	3	unshielded	Socket	D-Sub	open cable ends	10	13	0.22	suitable for dynamic laying	Polyurethane	R419500471

Dimensions

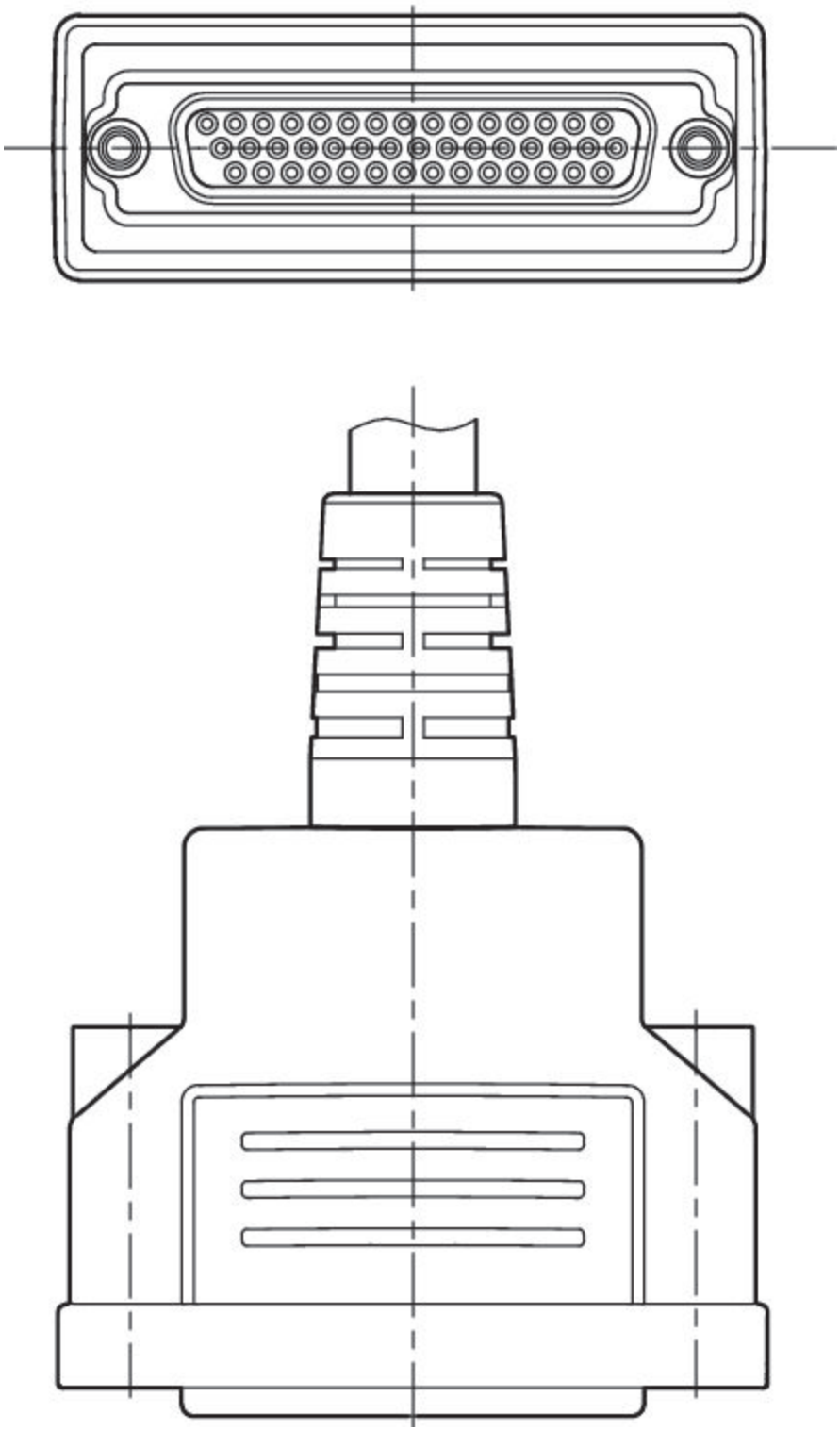

R419500466, R419500467, R419500468, R419500469, R419500470, R419500471

PIN assignment and cable colors

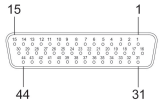

Socket

Pin	1	2	3	4	5	6	7	8	9	10
Color	white	brown	green	yellow	gray	pink	blue	red	black	violet

Pin	11	12	13	14	15	16	17	18	19	20
Color	gray/pink	red/blue	white/green	brown/green	white/yellow	yellow/brown	white/gray	gray/brown	white/pink	pink/brown

Pin	21	22	23	24	25	26	27	28	29	30
Color	white/blue	brown/blue	white/red	brown/red	white/black	brown/black	gray/green	yellow/gray	pink/green	yellow/pink

Pin	31	32	33	34	35	36	37	38	39	40
Color	green/blue	yellow/blue	green/red	yellow/red	gray/black	yellow/black	gray/blue	pink/blue	gray/red	pink/red

Pin	41	42	43	44
Color	gray/black	pink/black	blue/black	red/black

Multipole plug, series CON-MP

Electrical connection 1, type: Socket
Electrical connection 1, thread size: D-Sub
Electrical connection 1, number of poles: 44-pin
Min. ambient temperature: -20 °C
Max. ambient temperature: 80 °C

Operational voltage	Current [A]	Shielding	Electrical connection 1, type	Electrical connection 1, thread size	Electrical connection 2, type	Cable length [m]	Cable-Ø [mm]	Wire cross-section [mm²]	Suitable for dynamic laying	Material cable sheath	Part No.
24 V DC	3	unshielded	Socket	D-Sub	open cable ends	3	10.7	0.22		Polyvinyl chloride	R419500472
24 V DC	3	unshielded	Socket	D-Sub	open cable ends	5	10.7	0.22		Polyvinyl chloride	R419500473
24 V DC	3	unshielded	Socket	D-Sub	open cable ends	10	10.7	0.22		Polyvinyl chloride	R419500474
24 V DC	3	unshielded	Socket	D-Sub	open cable ends	3	13	0.22	suitable for dynamic laying	Polyurethane	R419500475
24 V DC	3	unshielded	Socket	D-Sub	open cable ends	5	13	0.22	suitable for dynamic laying	Polyurethane	R419500476
24 V DC	3	unshielded	Socket	D-Sub	open cable ends	10	13	0.22	suitable for dynamic laying	Polyurethane	R419500477

Dimensions

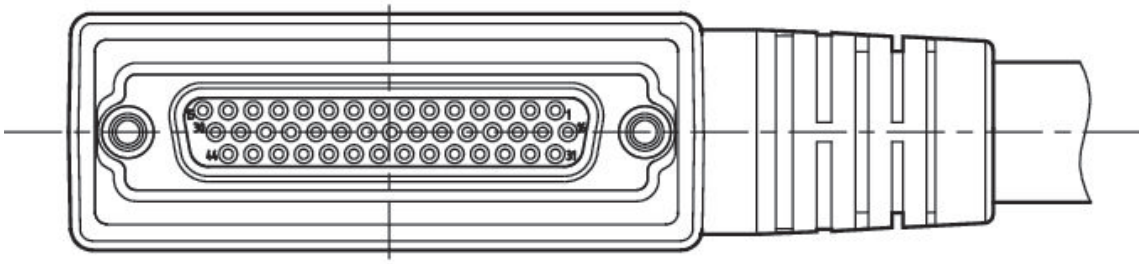

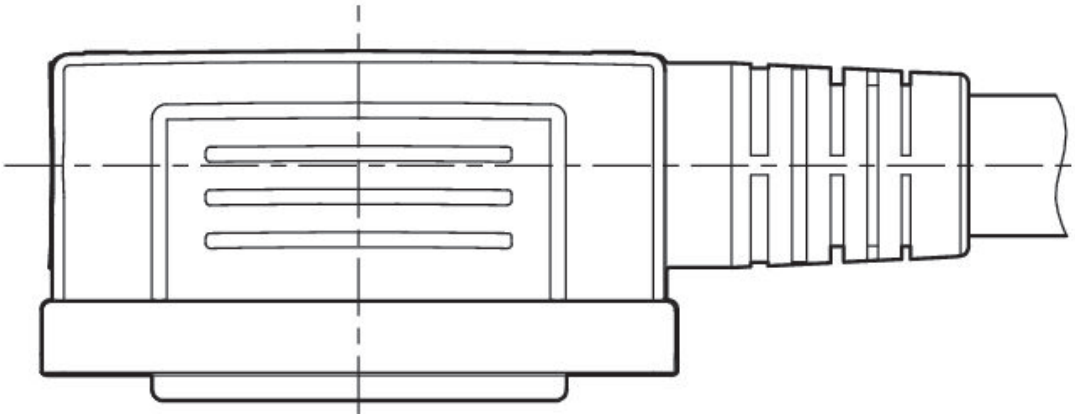

R419500472, R419500473, R419500474, R419500475, R419500476, R419500477

PIN assignment and cable colors

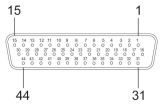

Socket

Pin	1	2	3	4	5	6	7	8	9	10
Color	white	brown	green	yellow	gray	pink	blue	red	black	violet

Pin	11	12	13	14	15	16	17	18	19	20
Color	gray/pink	red/blue	white/green	brown/green	white/yellow	yellow/brown	white/gray	gray/brown	white/pink	pink/brown

Pin	21	22	23	24	25	26	27	28	29	30
Color	white/blue	brown/blue	white/red	brown/red	white/black	brown/black	gray/green	yellow/gray	pink/green	yellow/pink

Pin	31	32	33	34	35	36	37	38	39	40
Color	green/blue	yellow/blue	green/red	yellow/red	gray/black	yellow/black	gray/blue	pink/blue	gray/red	pink/red

Pin	41	42	43	44
Color	gray/black	pink/black	blue/black	red/black

Multipole plug, series CON-MP

Electrical connection 1, type: Socket
Electrical connection 1, thread size: C/2

Operational voltage	Current [A]	Shielding	Electrical connection 1, type	Electrical connection 1, thread size	Electrical connection 2, type	Cable length [m]	Cable-Ø [mm]	Wire cross-section [mm²]	Material cable sheath	Part No.
24 V DC	3	unshielded	Socket	C/2	open cable ends	5	9.2	0.34	Polyvinyl chloride	0493871009
24 V DC	3	unshielded	Socket	C/2	open cable ends	10	9.2	0.34	Polyvinyl chloride	0493871203
24 V DC	3	unshielded	Socket	C/2	open cable ends	15	9.2	0.34	Polyvinyl chloride	0493871408
24 V DC	3	unshielded	Socket	C/2	open cable ends	5	13.5	0.34	Polyvinyl chloride	0493871106
24 V DC	3	unshielded	Socket	C/2	open cable ends	10	13.5	0.34	Polyvinyl chloride	0493871300
24 V DC	3	unshielded	Socket	C/2	open cable ends	15	13.5	0.34	Polyvinyl chloride	0493871505

Dimensions

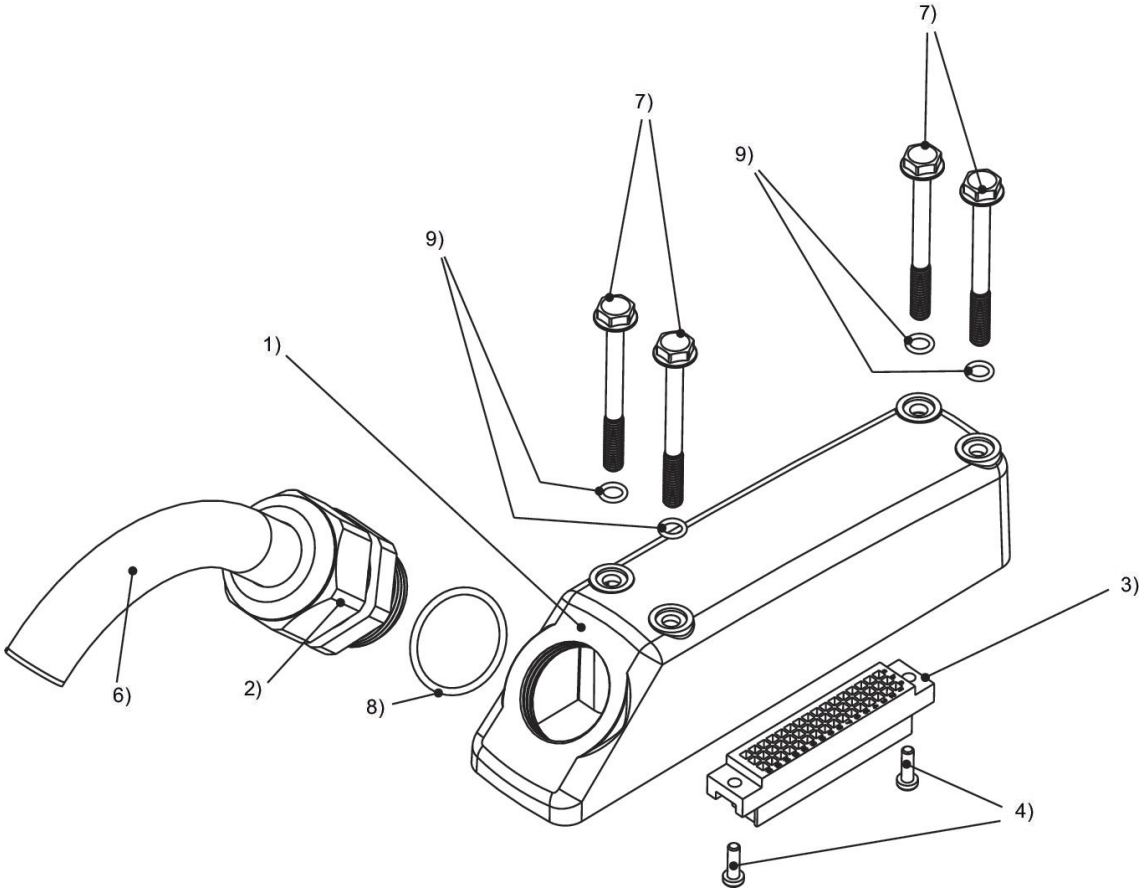

1) housing 2) cable gland 3) connector housing size C/2 4) screw 5) seal 6) cable 7) screw 8) seal 9) seal

0493871009, 0493871203, 0493871408, 0493871106, 0493871300, 0493871505

PIN assignment and cable colors

Pin Color	A	B	C
1	blue	white	brown
2	red/blue	green	yellow
3	white/pink	gray	pink
4	pink/brown	red	black
5	white/blue	violet	gray/pink
6	brown/blue	white/green	brown/green
7	white/red	white/yellow	yellow/brown
8	brown/red	white/gray	gray/brown

Efficient pneumatic solutions, our program: cylinders and drives, valves and valve systems, air supply management, proportional pressure control valves

Visit us: **www.Emerson.com/aventics**
Your local contact: **Emerson.com/contactus**

Emerson.com
Facebook.com/EmersonAutomationSolutions
LinkedIn.com/company/Emerson-Automation-Solutions
Twitter.com/EMR_Automation

The Emerson logo is a trademark and service mark of Emerson Electric Co. AVENTICS is a registered trademark of one of the Emerson family of companies. All other trademarks are the property of their respective owners. © 2020 Emerson Electric Co. All rights reserved.

EMERSON.

CONSIDER IT SOLVED™