Series CON-CB with cable

AVENTICS™

AVENTICS Series CON-CB
Contact bridges with cable

EMERSON™

AVENTICS Series CON-CB Contact bridges with cable

The AVENTICS Series CON-CB-with cable offers contact bridges which offers a variable and flexible multipin connection to individual valves form Series CD01-PA, 579/589 as well as for other Form C coils. It is possible to connect up to 8 coils with only one single connection cable.

- Contact bridges to adapt electrically operated valves with form C plug connector
- Especially suited for series CD01-PA, 579/589
- Multipole connection

Product overview

Page

Multipole
Contact bridges, series CON-CB 4
1x solenoid open cable ends
Contact bridges, series CON-CB 6
1x solenoid mini-DIN

Accessories CON-CB-with-cable
Round plug connector, Series CON-RD 8
Snap-in plug Ø8 , 3-pin
Adapter, Series CON-VP, from form A to form C 9
from form A to form C
Blanking plug, series CON-CB 10
Sealing cap for manual override 11
Protective cap 12

Contact bridges, series CON-CB

Electrical connection 1, type: open cable ends
Electrical connection 1, number of poles: 9-pin
Min. ambient temperature: -15 °C
Max. ambient temperature: 50 °C

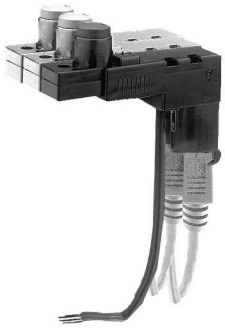

Operational voltage	Protective circuit	Max. current [A]	Contact assignment	LED status display	Cable length [m]	Part No.
24 V DC	43 V bi-directional	0.5	9-pin	Yellow	5	5763533113

Dimensions

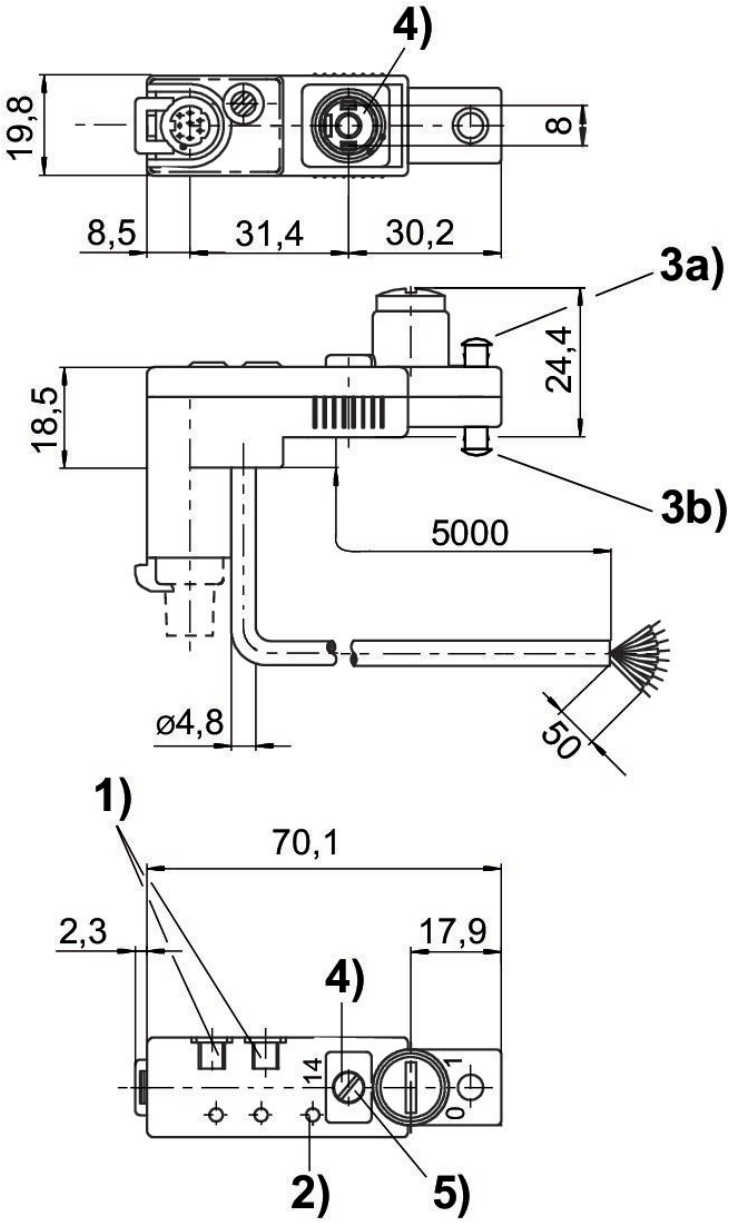

1) mounting space for name plate
2) Valve LED 3a) sealing cap for manual override, not removable 3b) sealing cap for manual override, removable
4) captive seal and screw
5) Tightening torque for mounting screws: 0,25 Nm + 0,05

Assignment scheme

Color	black	brown	Orange	yellow	green	violet	white	pink	blue
Allocation	solenoid 1	solenoid 2	solenoid 3	solenoid 4	solenoid 5	solenoid 6	solenoid 7	solenoid 8	Ground

Contact bridges, series CON-CB

Electrical connection 1, type: Plug
Electrical connection 1, thread size: mini-DIN
Electrical connection 1, number of poles: 8-pin
Min. ambient temperature: -15 °C
Max. ambient temperature: 50 °C

Operational voltage	Protective circuit	Max. current [A]	Contact assignment	LED status display	Cable length [m]	Part No.
24 V DC	43 V bi-directional	0.5	8-pin	Yellow	0.2	5763533103

Dimensions

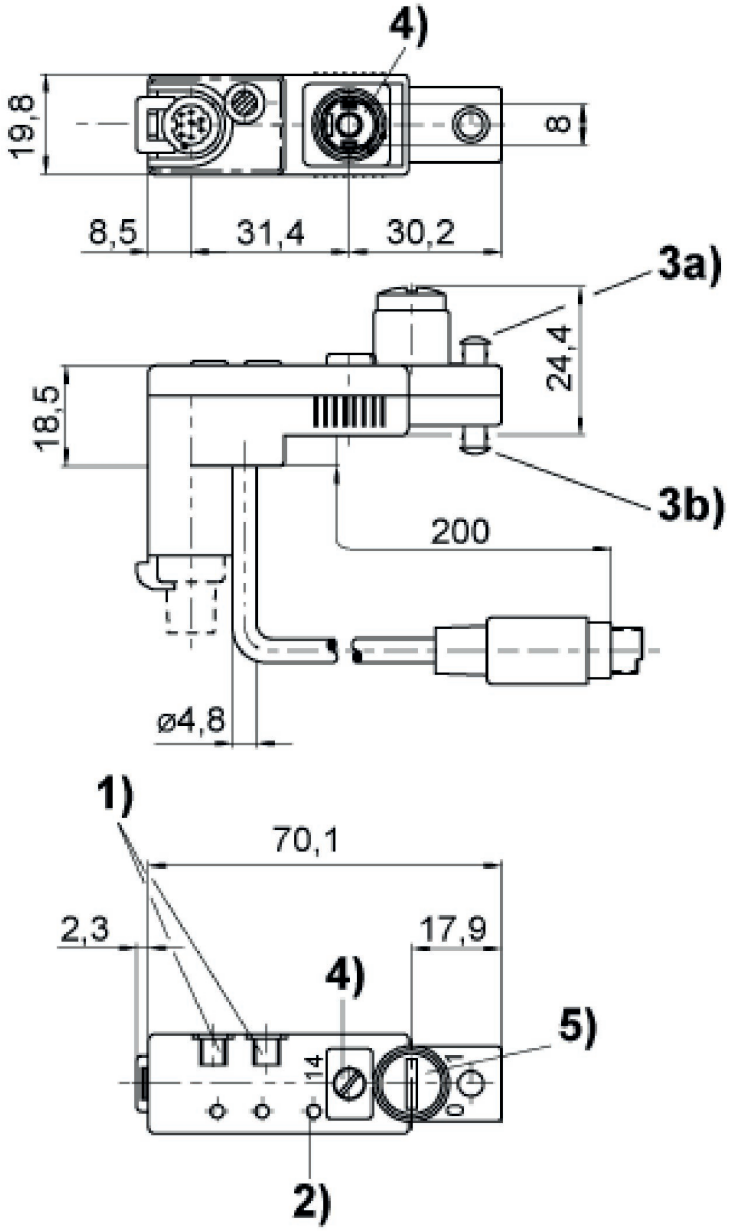

1) mounting space for name plate
2) Valve LED 3a) sealing cap for manual override, not removable 3b) sealing cap for manual override, removable
4) captive seal and screw
5) Tightening torque for mounting screws: 0,25 Nm + 0,05
6) additional possibility of grounding

Round plug connector, Series CON-RD

Electrical connection 1, type: Socket
Electrical connection 1, thread size: Snap Ø8
Electrical connection 1, number of poles: 3-pin

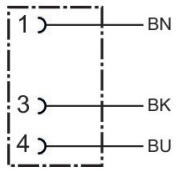

Operational voltage	Current [A]	Shielding	Electrical connection 1, type	Electrical connection 1, thread size	Electrical connection 2, type	Cable length [m]	Cable-Ø [mm]	Wire cross-section [mm²]	Part No.
48 V AC/DC	3	unshielded	Socket	Snap Ø8	open cable ends	2.5	4.5	0.25	8946016112

Dimensions

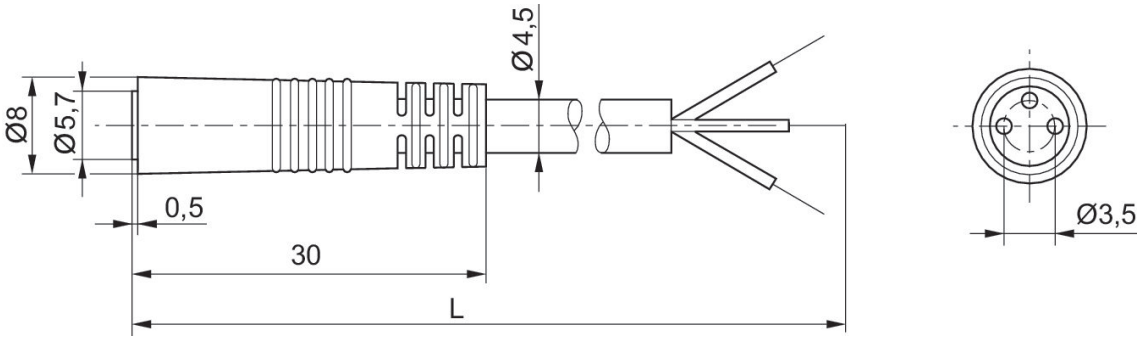

L = length

8946016112

Pin assignment, socket

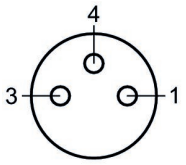

(1) BN=brown (2) BK=black (3) BU=blue

Adapter, Series CON-VP, from form A to form C

Min. ambient temperature: -25 °C
Max. ambient temperature: 50 °C

Type	Max. current [A]	Part No.
from form A to form C	0.5	8946053622

Dimensions

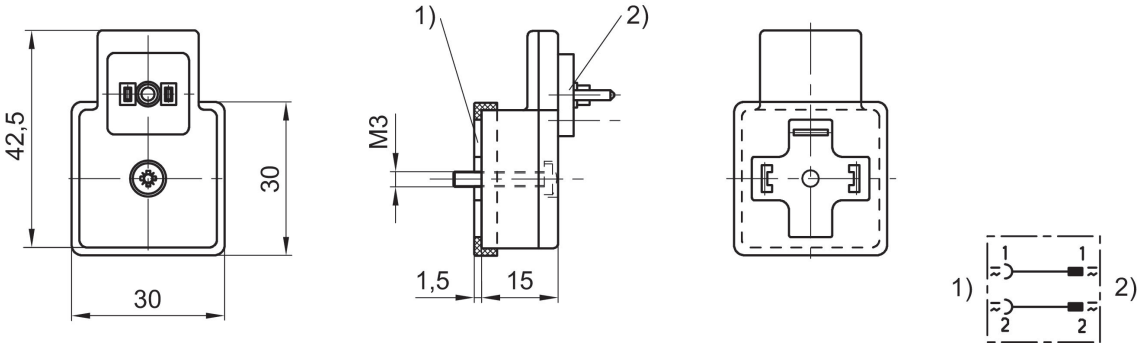

1) contact as per DIN EN 175301-803, form A
2) contact as per DIN EN 175301-803, form C

Blanking plug, series CON-CB

Type	Weight [kg]	Material	Part No.
for series CD01-PL	0.006	Polyoxymeth-ylene	5763500414

Dimensions

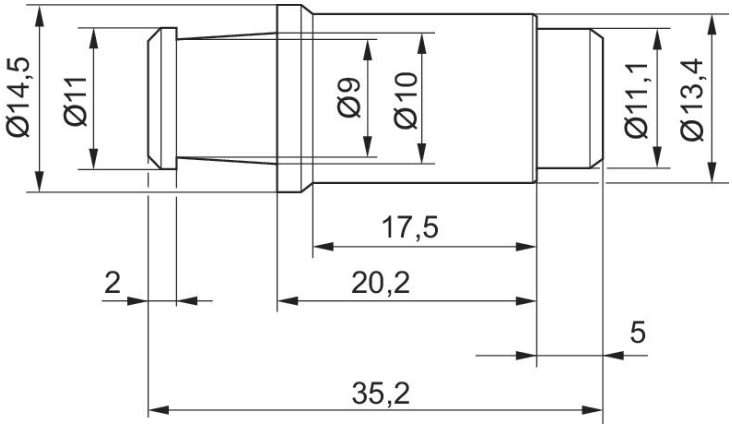

Sealing cap for manual override

Delivery unit [piece]	Weight [kg]	Material	Part No.
10	0.003	Polyamide	8980122904

Dimensions

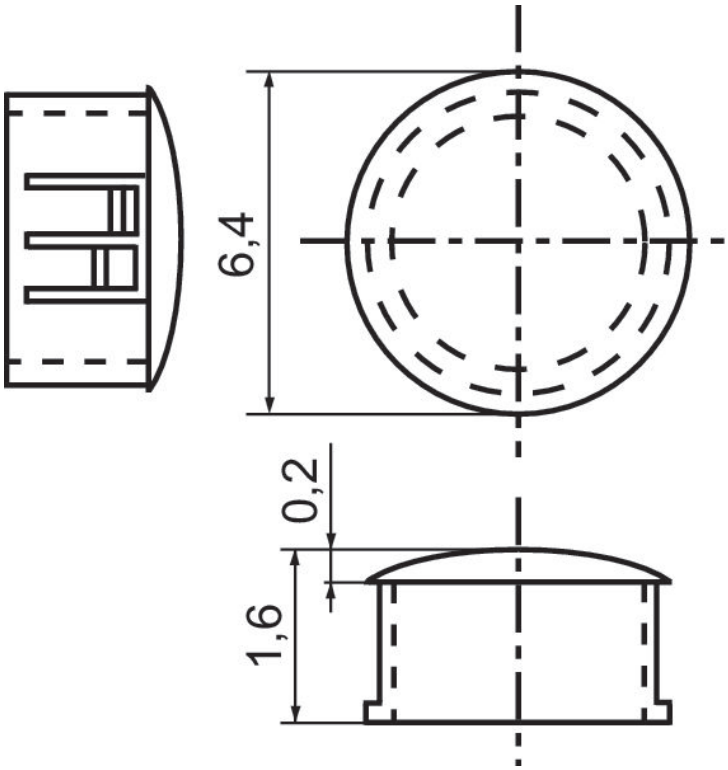

Protective cap

Thread connection	Weight [kg]	Material	Part No.
M12x1	0.001	Polyamide	8941350294

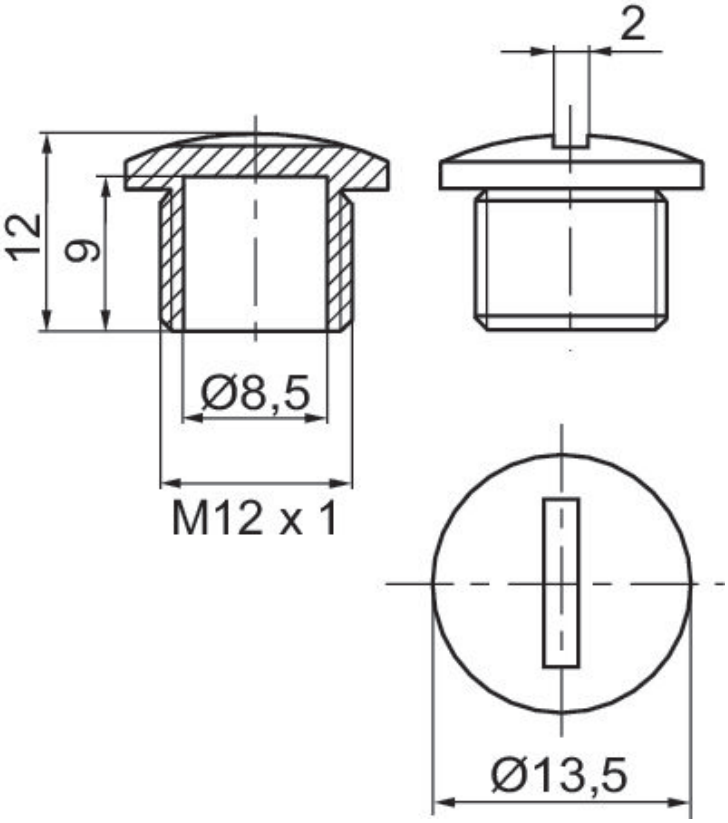

Efficient pneumatic solutions, our program: cylinders and drives, valves and valve systems, air supply management, proportional pressure control valves

Visit us: **www.Emerson.com/aventics**
Your local contact: **Emerson.com/contactus**

Emerson.com
Facebook.com/EmersonAutomationSolutions
LinkedIn.com/company/Emerson-Automation-Solutions
Twitter.com/EMR_Automation

The Emerson logo is a trademark and service mark of Emerson Electric Co. AVENTICS is a registered trademark of one of the Emerson family of companies. All other trademarks are the property of their respective owners. © 2020 Emerson Electric Co. All rights reserved.

EMERSON.

CONSIDER IT SOLVED™