Valve accessories

AVENTICS™

EMERSON™

Tubing connections with collar

AVENTICS fittings especially designed to be used on tubings using collars. Fittings are self sealing and offers a broad range of connectors or T-Union.

Product overview

Page

Tubing connections with collar

T-connector..... 4
Straight fitting, self-sealing..... 6
Y-connector..... 8
X-connector..... 10
Straight fitting, with sealing ring..... 11
Straight connector, reducing..... 13
Elbow fitting, self-sealing..... 15
T-union, self-sealing..... 17

T-connector

Clear-ance (LW) [mm]	Clear-ance LW2 [mm]	Delivery unit [piece]	Part No.
3	3	25	1823381015
4	4	25	1823381004
4	6	25	1823381009
6	4	25	1823381012
6	6	25	1823381007
8	4	25	1823381013
8	6	25	1823381014
8	8	25	1823381010
8	13	10	1823381006
10	6	10	1823381032
10	8	10	1823381033
10	10	10	1823381034
13	8	10	1823381005
13	10	10	1823381035
13	13	10	1823381011
19	19	10	1823381008

Dimensions

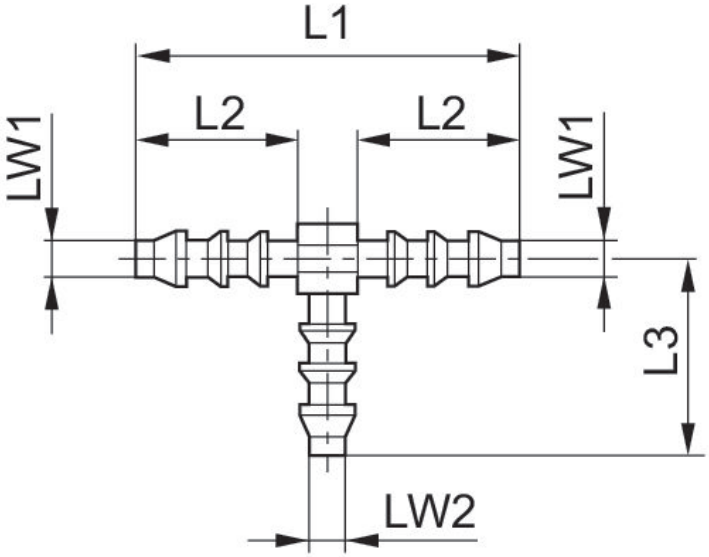

Dimensions in mm

Part No.	LW	LW2	L1	L2	L3
1823381015	3 mm	3 mm	25	10	13
1823381004	4 mm	4 mm	35	14.5	20
1823381009	4 mm	6 mm	35	14.5	24
1823381012	6 mm	4 mm	49	20.5	21
1823381007	6 mm	6 mm	50	20.5	26
1823381013	8 mm	4 mm	56	23	22
1823381014	8 mm	6 mm	56	23	28
1823381010	8 mm	8 mm	58	–	30
1823381006	8 mm	13 mm	58	22.5	36
1823381032	10 mm	6 mm	62	25	31
1823381033	10 mm	8 mm	62	25.5	31
1823381034	10 mm	10 mm	62	25	33
1823381005	13 mm	8 mm	70	–	34
1823381035	13 mm	10 mm	70	–	36
1823381011	13 mm	13 mm	73	–	39
1823381008	19 mm	19 mm	87	–	46

Straight fitting, self-sealing

Clear-ance (LW) [mm]	Port R	Delivery unit [piece]	Part No.
4	R 1/8	25	1823386043
6	R 1/8	25	1823386044
6	R 1/4	25	1823386045
4	R 1/4	10	8931290054
8	R 1/4	25	1823386000
10	R 1/4	25	1823386055
6	R 3/8	10	1823386054
8	R 3/8	10	1823386001
10	R 3/8	10	1823386056
12	R 3/8	10	1823386003
8	R 1/2	10	1823386002
13	R 1/2	10	1823386004

Dimensions

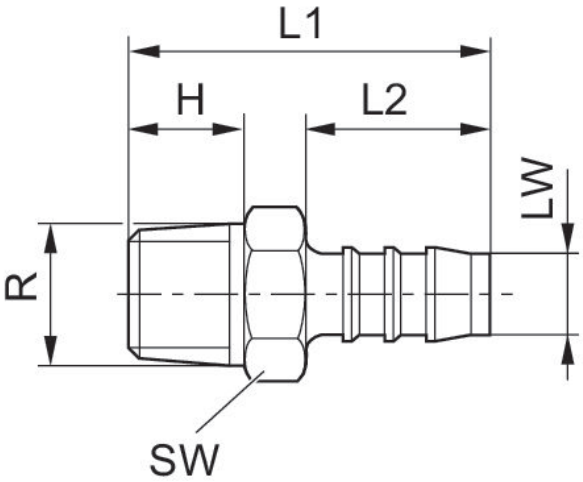

Dimensions in mm

Part No.	Port R	LW	H	L1	L2	SW
1823386043	R 1/8	4 mm	8	27	15	10
1823386044	R 1/8	6 mm	8	33	20	10
1823386045	R 1/4	6 mm	12	38	20	14
1823386000	R 1/4	8 mm	12	41	23	14
1823386055	R 1/4	10 mm	12	43	25	14
1823386054	R 1/4	6 mm	12	39	20	17
1823386001	R 3/8	8 mm	12	44	23	17
1823386056	R 3/8	10 mm	12	43	25	17
1823386003	R 3/8	12 mm	12	48	28	17
1823386002	R 1/2	8 mm	17	49	23	22

Y-connector

Clear-ance (LW) [mm]	Clear-ance LW2 [mm]	Delivery unit [piece]	Part No.
3	3	25	1823381020
4	4	25	1823381021
4	6	25	1823381026
6	6	25	1823381022
6	8	25	1823381027
8	8	25	1823381023
13	13	10	1823381024
19	19	10	1823381025

Dimensions

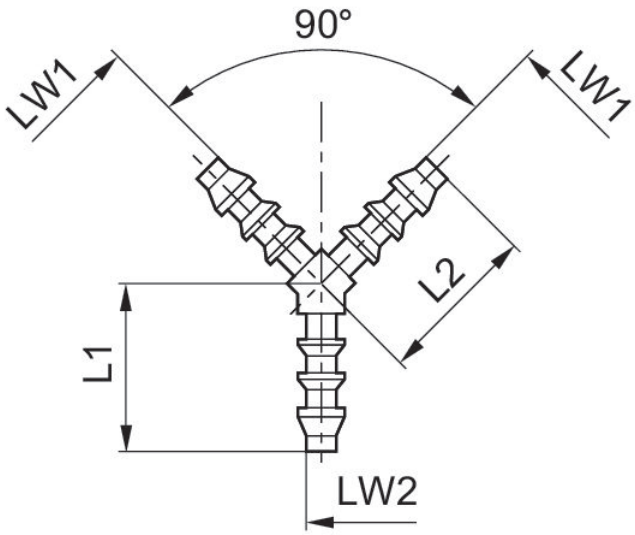

Dimensions in mm

Part No.	LW	LW2	L1	L2
1823381020	3 mm	3 mm	13	13
1823381021	4 mm	4 mm	20	20
1823381026	4 mm	6 mm	20	26

Part No.	LW	LW2	L1	L2
1823381022	6 mm	6 mm	26	26
1823381027	6 mm	8 mm	26	30
1823381023	8 mm	8 mm	30	30
1823381024	13 mm	13 mm	39	39
1823381025	19 mm	19 mm	46	46

X-connector

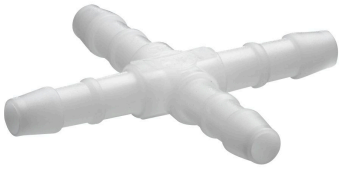

Clear-ance (LW) [mm]	Delivery unit [piece]	Part No.
4	25	1823381028
6	25	1823381029

Dimensions

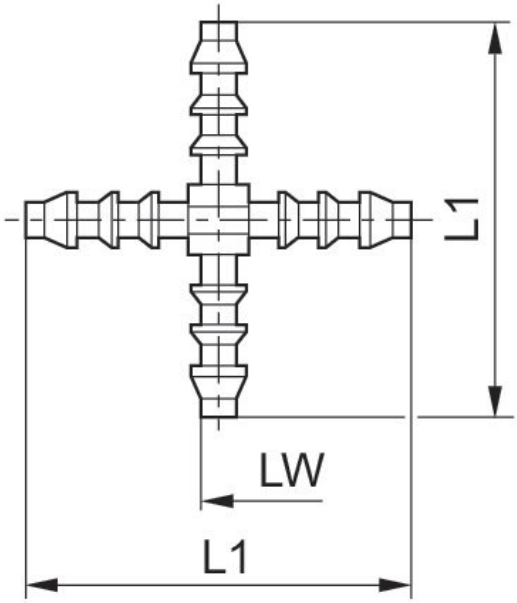

Dimensions in mm

Part No.	LW	L1
1823381028	4 mm	39
1823381029	6 mm	48

Straight fitting, with sealing ring

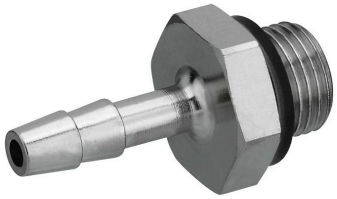

Clear-ance (LW) [mm]	Compressed air con-nection	Delivery unit [piece]	Part No.
4	M5	25	1823386006
4	G 1/8	10	1823386007
6	G 1/8	10	1823386008
8	G 1/8	10	1823386009
4	G 1/4	10	1823386012
6	G 1/4	10	1823386013
8	G 1/4	10	1823386014
6	G 3/8	10	1823386036
8	G 3/8	10	1823386037
13	G 3/8	10	1823386038
8	G 1/2	5	1823386039
13	G 1/2	5	1823386040
13	G 3/4	5	1823386041
19	G 3/4	5	1823386042

Dimensions

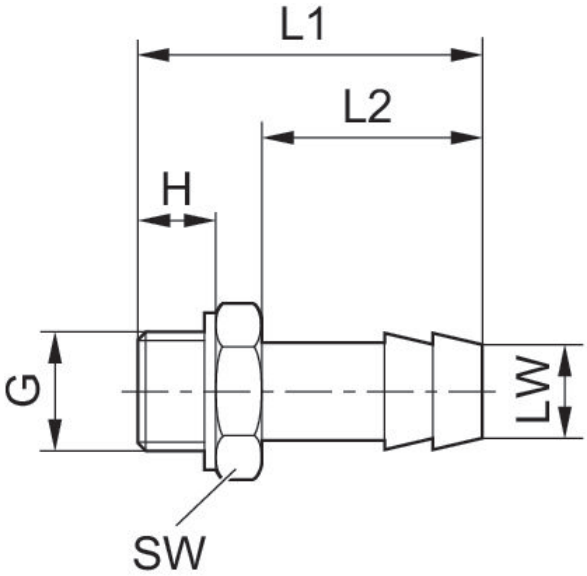

Dimensions in mm

			H	L1	L2	SW
1823386007	G 1/8	4 mm	5	15.5	7.5	7
1823386007	G 1/8	4 mm	7	28	17	14
1823386008	G 1/8	6 mm	7	33	22	14
1823386009	G 1/8	8 mm	7	33	22	14
1823386012	G 1/4	4 mm	9	30	17	17
1823386013	G 1/4	6 mm	9	35	22	17
1823386014	G 1/4	8 mm	9	35	22	17
1823386036	G 3/8	6 mm	9	36	22	19
1823386037	G 3/8	8 mm	9	36	22	19
1823386038	G 3/8	13 mm	9	42	28	19
1823386039	G 1/2	8 mm	12	40	22	27
1823386040	G 1/2	13 mm	12	46	28	27
1823386041	G 3/4	13 mm	16	52	28	32
1823386042	G 3/4	19 mm	16	60	36	32

Straight connector, reducing

Clear-ance (LW) [mm]	Clear-ance LW2 [mm]	Delivery unit [piece]	Part No.
3	3	50	1823386046
4	3	50	1823386050
4	4	50	1823386047
6	4	50	1823386051
6	6	50	1823386048
8	4	25	1823386052
8	6	25	1823386053
8	8	25	1823386010
8	13	25	1823386005
10	6	25	1823386057
10	8	25	1823386058
10	10	25	1823386059
12	12	25	1823386011
19	19	10	1823386049

Dimensions

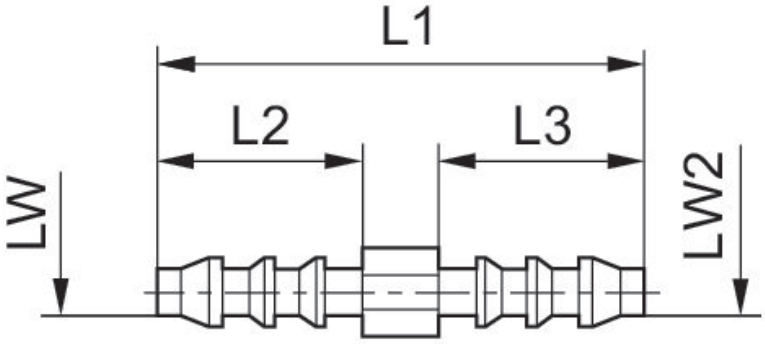

Dimensions in mm

Part No.	LW	LW2	L1	L2
8931290944	4	4	43	19

Part No.	LW	LW2	L1	L2
8931290934	8	4	52	19
8931290904	8	8	52	23
8931290924	12	8	68,5	23
8931290914	12	12	72	27,5

Elbow fitting, self-sealing

Clear-ance (LW) [mm]	Port R	Delivery unit [piece]	Part No.
4	R 1/8	25	1823379005
6	R 1/8	25	1823379006
6	R 1/4	25	1823379007
8	R 1/4	25	1823379000
10	R 1/4	10	1823379009
6	R 3/8	10	1823379008
8	R 3/8	10	1823379001
10	R 3/8	10	1823379010
13	R 3/8	10	1823379003
8	R 1/2	10	1823379002
13	R 1/2	10	1823379004

Dimensions

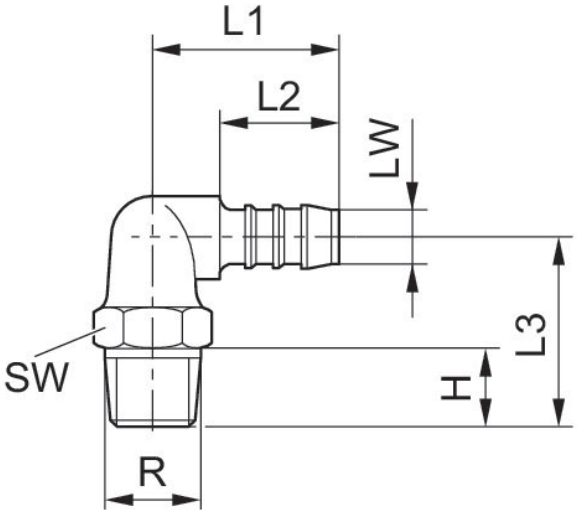

Dimensions in mm

Part No.	R	LW	H	L1	L2	L3	SW
8931290184	R 1/8	4	8	25	19	18	10
8931290154	R 1/4	4	12	21	15	22	14
8931290444	R 1/4	8	12	33	23	27,5	14
8931290464	R 3/8	8	12	36	23	31	17
8931290754	R 3/8	12	12	38,5	27,5	30	17
8931291304	R 1/2	12	17	40,5	27,5	36	22

T-union, self-sealing

Clear-ance (LW) [mm]	Port R	Delivery unit [piece]	Part No.
4	R 1/8	25	1823381001
6	R 1/8	25	1823381002
6	R 1/4	25	1823381003
8	R 1/4	25	1823381000

Dimensions

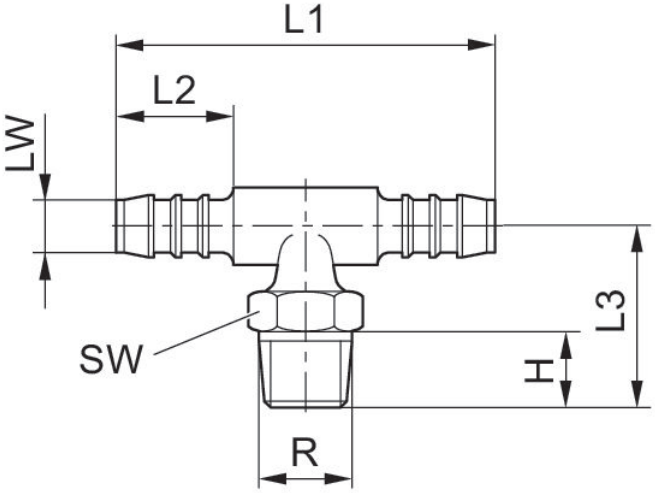

Dimensions in mm

Part No.	R	LW	H	L1	L2	L3	SW
1823381001	R 1/8	4	8	44	15	18	10
1823381002	R 1/8	6	8	57	20	21	10
1823381003	R 1/4	6	12	57	20	26	14
1823381000	R 1/4	8	12	66	23	28	14

Efficient pneumatic solutions, our program: cylinders and drives, valves and valve systems, air supply management, proportional pressure control valves

Visit us: **www.Emerson.com/aventics**
Your local contact: **Emerson.com/contactus**

Emerson.com
Facebook.com/EmersonAutomationSolutions
LinkedIn.com/company/Emerson-Automation-Solutions
Twitter.com/EMR_Automation

The Emerson logo is a trademark and service mark of Emerson Electric Co. AVENTICS is a registered trademark of one of the Emerson family of companies. All other trademarks are the property of their respective owners. © 2020 Emerson Electric Co. All rights reserved.

EMERSON.

CONSIDER IT SOLVED™