Series SWN

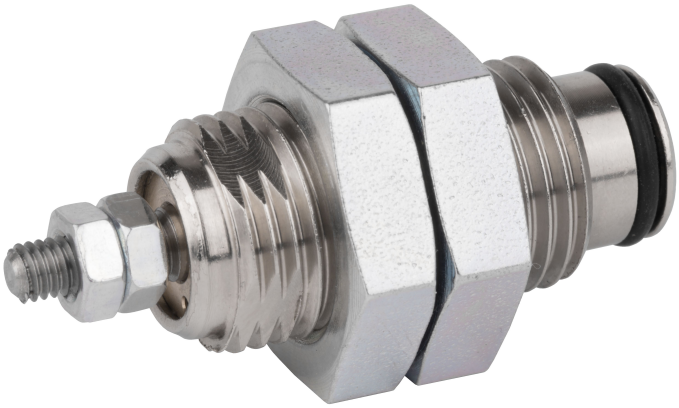

AVENTICS™

AVENTICS Series SWN Screw-in cylinders

EMERSON™

Series SWN

The AVENTICS Series SWN is a cartridge cylinder and thus can implemented in tight space.

- Electrical control
- Ø 6 ... 16 mm
- Screw-in cylinder for tensioning and positioning of small components

Product overview

Page

Screw-in cylinder
Screw-in cylinder, Series SWN..... 4
Spring force [N] 2,1 ... 17,5

Screw-in cylinder, Series SWN

Note: Spring force [N] 2,1 ... 17,5
: Mini and round cylinders
: Industry standard
Piston rod: single
Magnetic piston: Piston without magnet
Cushioning: elastic cushioning
Piston rod thread - type: External thread
Functional principle: single-acting
Min. ambient temperature: -20 °C
Max. ambient temperature: 80 °C
Min. working pressure: 2 bar
Max. working pressure: 8 bar

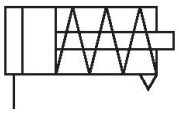

Piston Ø [mm]	Stroke [mm]	Extracting piston force [N]	Part No.
6	5	15	0822406900
6	10	15	0822406901
6	15	15	0822406902
10	5	38	0822406910
10	10	38	0822406911
10	15	38	0822406912
16	5	100	0822406920
16	10	100	0822406921
16	15	100	0822406922

Dimensions

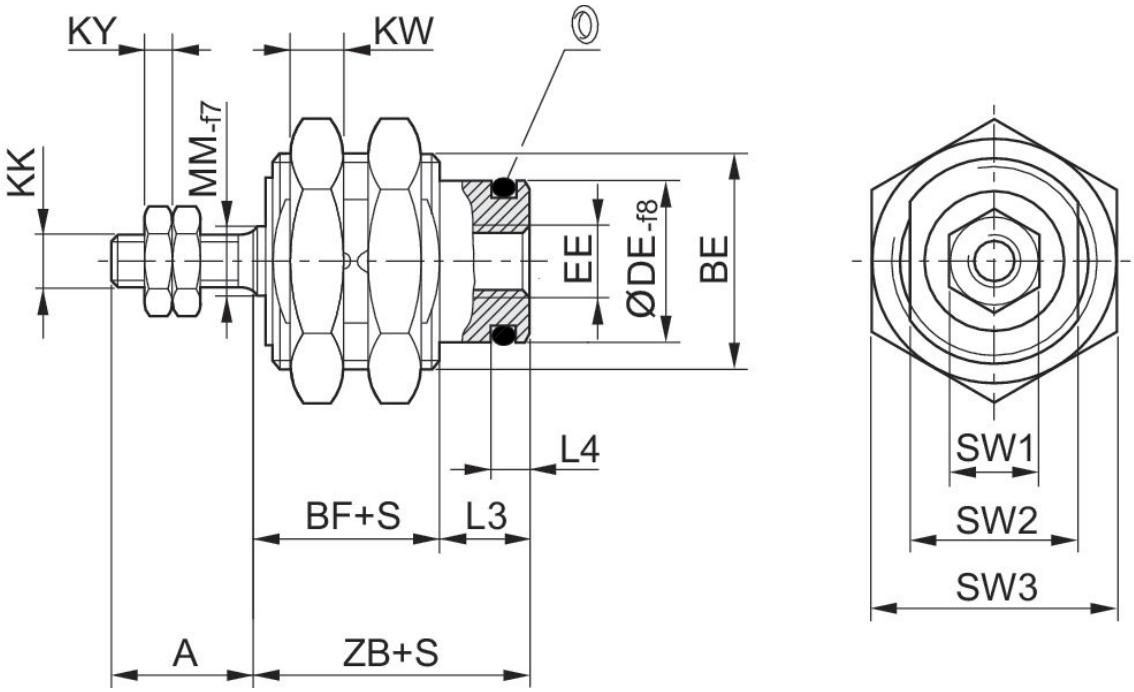

S = stroke

Part No.	Piston Ø	S	A	BE	BF	DE 1)	Min. spring force [N]	Spring force [N] max.	EE
0822406900	6	5	7	M10x1	8.5	7.6	2.4	4.4	M5
0822406901	6	10	7	M10x1	10.5	7.6	2.1	5.8	M5
0822406902	6	15	7	M10x1	12.5	7.6	2.3	5	M5
0822406910	10	5	10	M16x1,5	9.5	12	5.8	9.2	M5
0822406911	10	10	10	M16x1,5	11	12	4.1	7.7	M5
0822406912	10	15	10	M16x1,5	13	12	3.9	8.3	M5
0822406920	16	5	12	M22x1,5	12.8	18.5	14	17	M5
0822406921	16	10	12	M22x1,5	13.8	18.5	11.5	16.5	M5
0822406922	16	15	12	M22x1,5	15.3	18.5	8.5	17.5	M5

Part No.	Piston Ø	KK	KW	KY	L3	L4	MM	SW1	SW2
0822406900	6	M3	3	2.3	6	2.5	3	5.5	9
0822406901	6	M3	3	2.3	6	2.5	3	5.5	9
0822406902	6	M3	3	2.3	6	2.5	3	5.5	9
0822406910	10	M4	6	3	7	3	5	7	14
0822406911	10	M4	6	3	7	3	5	7	14
0822406912	10	M4	6	3	7	3	5	7	14
0822406920	16	M5	5	3.8	6.7	3.2	5	8	20
0822406921	16	M5	5	3.8	6.7	3.2	5	8	20
0822406922	16	M5	5	3.8	6.7	3.2	5	8	20

Part No.	Piston Ø	SW3	ZB
0822406900	6	14	14.5
0822406901	6	14	16.5
0822406902	6	14	18.5
0822406910	10	22	16.5
0822406911	10	22	18
0822406912	10	22	20
0822406920	16	27	19.5
0822406921	16	27	20.5
0822406922	16	27	22

1) Recommended receiving bore DE_{H7}

Efficient pneumatic solutions, our program: cylinders and drives, valves and valve systems, air supply management, proportional pressure control valves

Visit us: **www.Emerson.com/aventics**
Your local contact: **Emerson.com/contactus**

Emerson.com
Facebook.com/EmersonAutomationSolutions
LinkedIn.com/company/Emerson-Automation-Solutions
Twitter.com/EMR_Automation

The Emerson logo is a trademark and service mark of Emerson Electric Co. AVENTICS is a registered trademark of one of the Emerson family of companies. All other trademarks are the property of their respective owners. © 2020 Emerson Electric Co. All rights reserved.

EMERSON.

CONSIDER IT SOLVED™