# Series FSO

AVENTICS™

## AVENTICS Series FSO Flat suction grippers

EMERSON™

## Series FSO

AVENTICS Series FSO are a range oval flat suction cups are ideal for long and cylindrical workpieces. Thanks to their oval shape, the contact surface available for establishing the vacuum is increased and optimized.

# Product overview

Page

**Oval suction gripper**
Oval suction gripper, Series FSO pluggable ..... 4
Oval suction gripper, Series FSO Internal thread ..... 6
Oval suction gripper, Series FSO Internal thread Heat resistant ..... 8
Oval suction gripper, Series FSO External thread ..... 10
Oval suction gripper, Series FSO External thread Heat resistant ..... 12

## Oval suction gripper, Series FSO

Min. ambient temperature: -10 °C
Max. ambient temperature: 70 °C

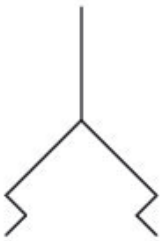

| Holding force [N] | Volume [cm³] | Delivery unit [piece] | Weight [kg] | Part No. |
|---|---|---|---|---|
| 0.42 | 0.004 | 5 | 0.001 | 1820455109 |
| 1 | 0.019 | 5 | 0.001 | 1820455110 |

Dimensions

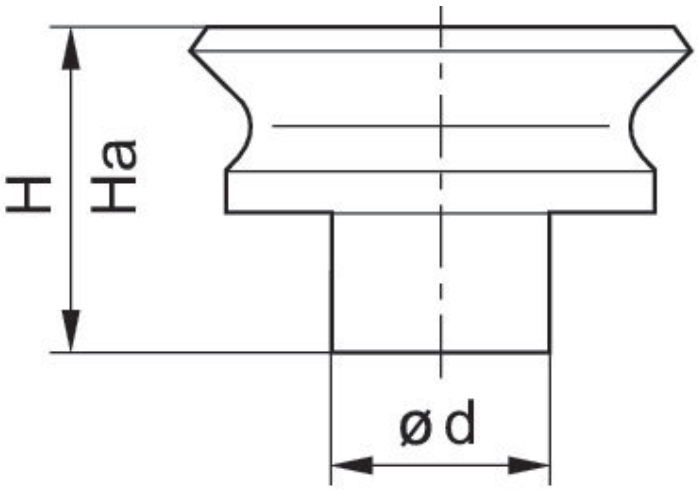


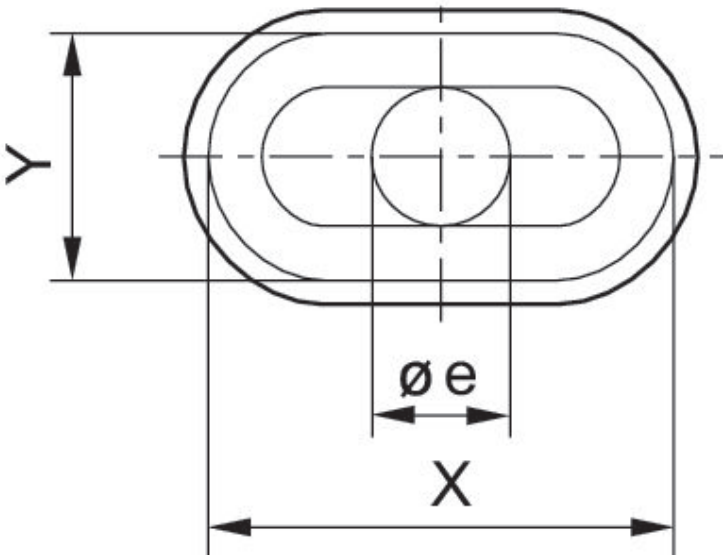

| Part No. | X | Y | Ø e | Ø d | Ha*) | H |
|---|---|---|---|---|---|---|
| 1820455109 | 4.2 | 2.2 | 1.2 | 2.2 | 2.5 | 3 |
| 1820455110 | 7 | 3.5 | 1.5 | 3.5 | 3.7 | 4.5 |

*) Height for vacuum operation

**Max. curving on object R min**

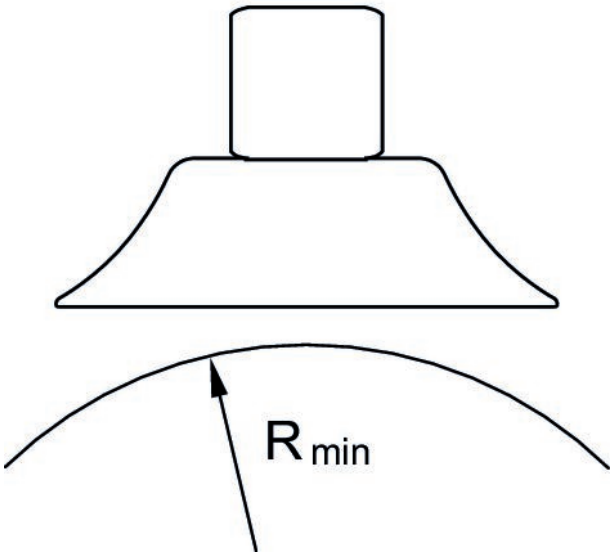

## Oval suction gripper, Series FSO

Compressed air connection type: Internal thread
Min. ambient temperature: -10 °C
Max. ambient temperature: 70 °C

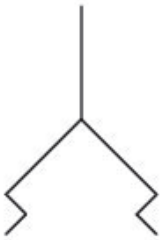

| Compressed air connection | Holding force [N] | Volume [cm³] | Delivery unit [piece] | Weight [kg] | Part No. |
|---|---|---|---|---|---|
| M5 | 3.1 | 0.036 | 1 | 0.004 | 1820415137 |
| M5 | 4.5 | 0.058 | 1 | 0.004 | 1820415138 |
| G 1/8 | 8 | 0.138 | 1 | 0.007 | 1820415139 |
| G 1/8 | 12.2 | 0.28 | 1 | 0.007 | 1820415140 |
| G 1/4 | 28.2 | 0.98 | 1 | 0.014 | 1820415141 |
| G 1/4 | 50.1 | 2.3 | 1 | 0.018 | 1820415142 |
| G 1/4 | 78.3 | 4.7 | 1 | 0.026 | 1820415143 |
| G 1/4 | 112.6 | 8.5 | 1 | 0.035 | 1820415144 |

Dimensions

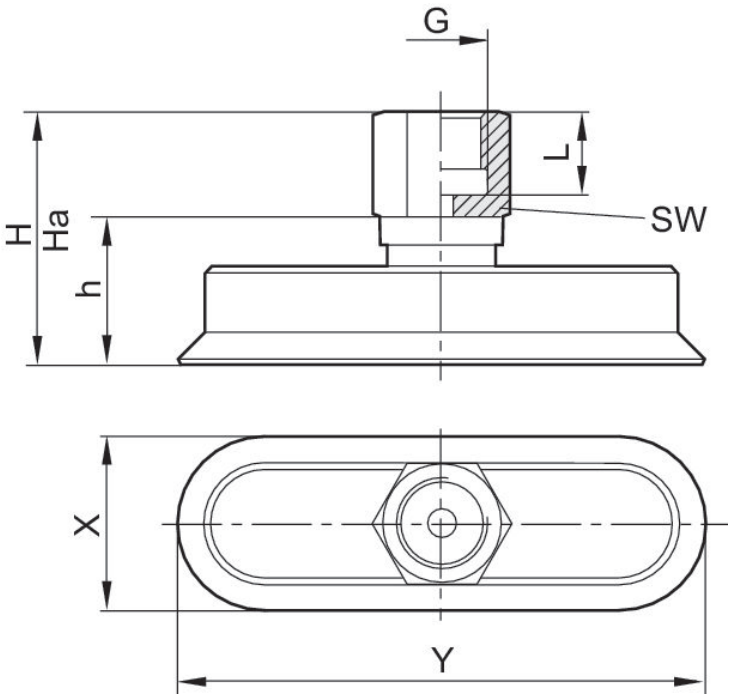

| Part No. | X | Y | Ha*) | H | h | L | SW |
|---|---|---|---|---|---|---|---|
| 1820415137 | 5 | 15 | 21.3 | 22 | 12 | 8.5 | 8 |
| 1820415138 | 6 | 18 | 21.2 | 22 | 12 | 8.5 | 8 |
| 1820415139 | 8 | 24 | 24 | 25 | 12 | 9 | 14 |
| 1820415140 | 10 | 30 | 23.5 | 25 | 12 | 9 | 14 |
| 1820415141 | 15 | 45 | 34 | 36 | 21 | 12 | 17 |
| 1820415142 | 20 | 60 | 33.5 | 36 | 21 | 12 | 17 |
| 1820415143 | 25 | 75 | 33.2 | 36 | 21 | 12 | 17 |
| 1820415144 | 30 | 90 | 32.5 | 36 | 21 | 12 | 17 |

*) Height for vacuum operation

## Max. curving on object R min

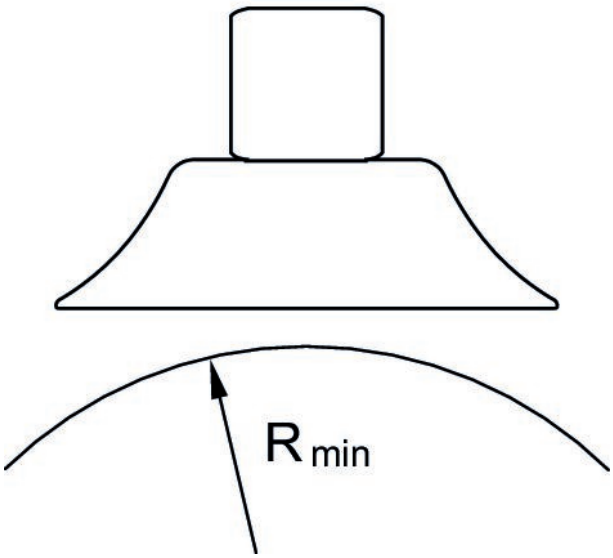

## Oval suction gripper, Series FSO

Compressed air connection type: Internal thread
Temperature resistance: Heat resistant
Min. ambient temperature: -30 °C
Max. ambient temperature: 180 °C

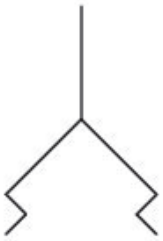

| Compressed air connection | Holding force [N] | Volume [cm³] | Delivery unit [piece] | Weight [kg] | Part No. |
|---|---|---|---|---|---|
| M5 | 3.1 | 0.036 | 1 | 0.004 | 1820415145 |
| M5 | 4.5 | 0.058 | 1 | 0.004 | 1820415146 |
| G 1/8 | 8 | 0.138 | 1 | 0.007 | 1820415147 |
| G 1/8 | 12.2 | 0.28 | 1 | 0.007 | 1820415148 |
| G 1/4 | 28.2 | 0.98 | 1 | 0.014 | 1820415149 |
| G 1/4 | 50.1 | 2.3 | 1 | 0.018 | 1820415150 |
| G 1/4 | 78.3 | 4.7 | 1 | 0.026 | 1820415151 |
| G 1/4 | 112.6 | 8.5 | 1 | 0.035 | 1820415152 |

Dimensions

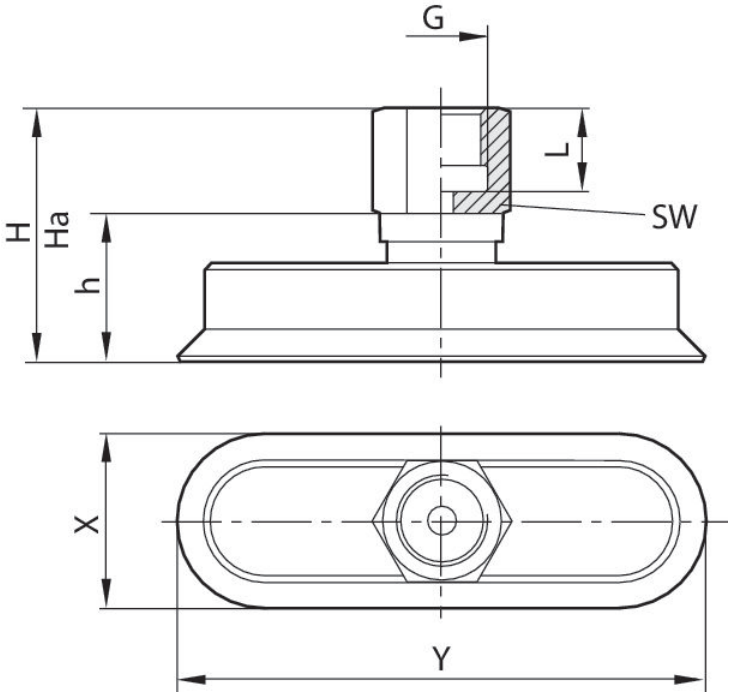

| Part No. | G | X | Y | Ha*) | H | h | L | SW |
|---|---|---|---|---|---|---|---|---|
| 1820415145 | M5 | 5 | 15 | 21.3 | 22 | 12 | 8.5 | 8 |
| 1820415146 | M5 | 6 | 18 | 21.2 | 22 | 12 | 8.5 | 8 |
| 1820415147 | G 1/8 | 8 | 24 | 24 | 25 | 12 | 9 | 14 |
| 1820415148 | G 1/8 | 10 | 30 | 23.5 | 25 | 12 | 9 | 14 |
| 1820415149 | G 1/4 | 15 | 45 | 34 | 36 | 21 | 12 | 17 |
| 1820415150 | G 1/4 | 20 | 60 | 33.5 | 36 | 21 | 12 | 17 |
| 1820415151 | G 1/4 | 25 | 75 | 33.2 | 36 | 21 | 12 | 17 |
| 1820415152 | G 1/4 | 30 | 90 | 32.5 | 36 | 21 | 12 | 17 |

*) Height for vacuum operation

### Max. curving on object R min

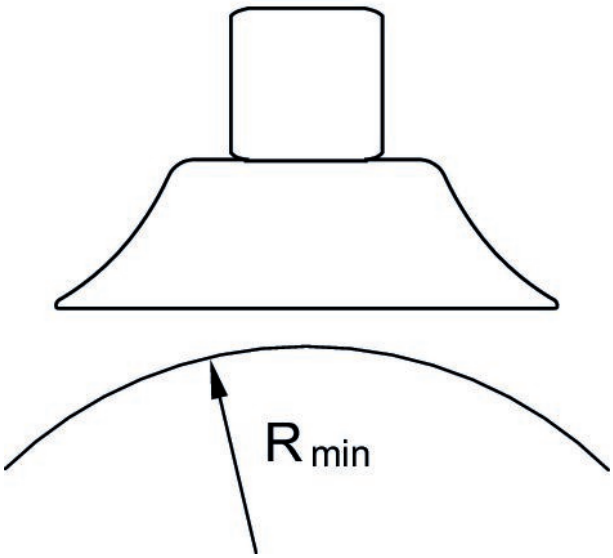

## Oval suction gripper, Series FSO

Compressed air connection type: External thread
Min. ambient temperature: -10 °C
Max. ambient temperature: 70 °C

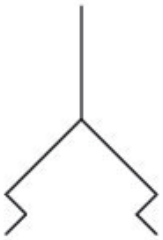

| Compressed air connection | Holding force [N] | Volume [cm³] | Delivery unit [piece] | Weight [kg] | Part No. |
|---|---|---|---|---|---|
| M5 | 3.1 | 0.036 | 1 | 0.004 | 1820415121 |
| M5 | 4.5 | 0.058 | 1 | 0.004 | 1820415122 |
| G 1/8 | 8 | 0.138 | 1 | 0.007 | 1820415123 |
| G 1/8 | 12.2 | 0.28 | 1 | 0.007 | 1820415124 |
| G 1/4 | 28.2 | 0.98 | 1 | 0.014 | 1820415125 |
| G 1/4 | 50.1 | 2.3 | 1 | 0.018 | 1820415126 |
| G 1/4 | 78.3 | 4.7 | 1 | 0.026 | 1820415127 |
| G 1/4 | 112.6 | 8.5 | 1 | 0.035 | 1820415128 |

Dimensions

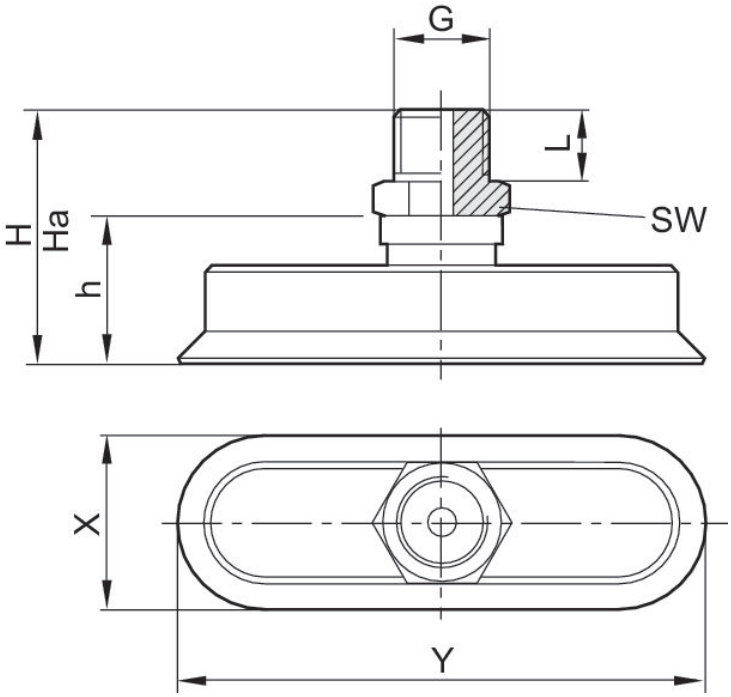

| Part No. | G | X | Y | Ha*) | H | h | L | SW |
|---|---|---|---|---|---|---|---|---|
| 1820415121 | M5 | 5 | 15 | 21.3 | 22 | 12 | 5 | 8 |
| 1820415122 | M5 | 6 | 18 | 21.2 | 22 | 12 | 5 | 8 |
| 1820415123 | G 1/8 | 8 | 24 | 24 | 25 | 12 | 8 | 14 |
| 1820415124 | G 1/8 | 10 | 30 | 23.5 | 25 | 12 | 8 | 14 |
| 1820415125 | G 1/4 | 15 | 45 | 34 | 36 | 21 | 10 | 17 |
| 1820415126 | G 1/4 | 20 | 60 | 33.5 | 36 | 21 | 10 | 17 |
| 1820415127 | G 1/4 | 25 | 75 | 33.2 | 36 | 21 | 10 | 17 |
| 1820415128 | G 1/4 | 30 | 90 | 32.5 | 36 | 21 | 10 | 17 |

*) Height for vacuum operation

### Max. curving on object R min

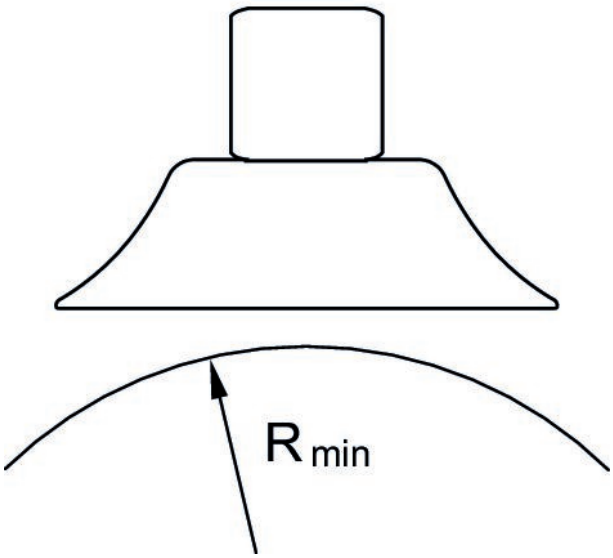

## Oval suction gripper, Series FSO

Compressed air connection type: External thread
Temperature resistance: Heat resistant
Min. ambient temperature: -30 °C
Max. ambient temperature: 180 °C

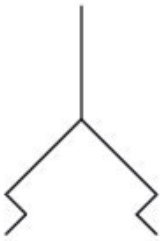

| Compressed air connection | Holding force [N] | Volume [cm³] | Delivery unit [piece] | Weight [kg] | Part No. |
|---|---|---|---|---|---|
| M5 | 3.1 | 0.036 | 1 | 0.004 | 1820415129 |
| M5 | 4.5 | 0.058 | 1 | 0.004 | 1820415130 |
| G 1/8 | 8 | 0.138 | 1 | 0.007 | 1820415131 |
| G 1/8 | 12.2 | 0.28 | 1 | 0.007 | 1820415132 |
| G 1/4 | 28.2 | 0.98 | 1 | 0.014 | 1820415133 |
| G 1/4 | 50.1 | 2.3 | 1 | 0.018 | 1820415134 |
| G 1/4 | 78.3 | 4.7 | 1 | 0.026 | 1820415135 |
| G 1/4 | 112.6 | 8.5 | 1 | 0.035 | 1820415136 |

Dimensions

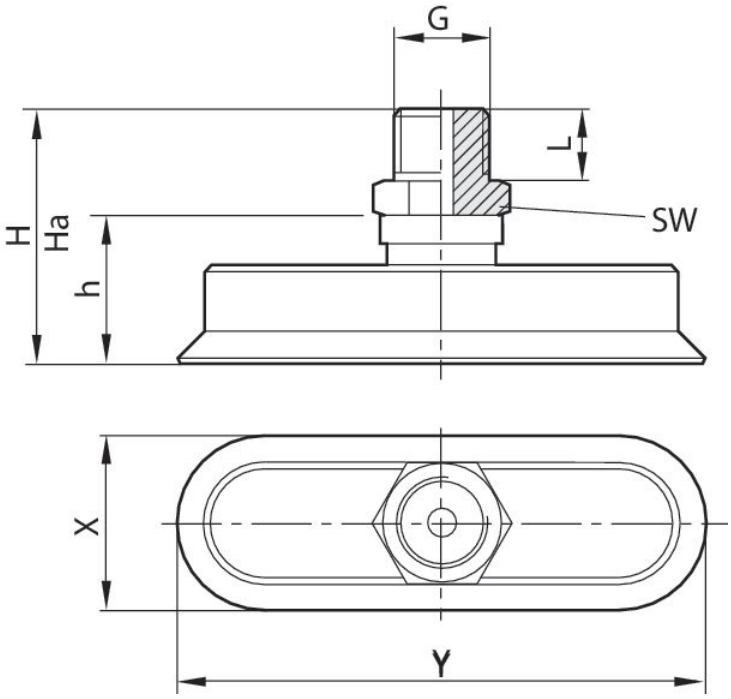

| Part No. | G | X | Y | Ha*) | H | h | L | SW |
|---|---|---|---|---|---|---|---|---|
| 1820415129 | M5 | 5 | 15 | 21.3 | 22 | 12 | 5 | 8 |
| 1820415130 | M5 | 6 | 18 | 21.2 | 22 | 12 | 5 | 8 |
| 1820415131 | G 1/8 | 8 | 24 | 24 | 25 | 12 | 8 | 14 |
| 1820415132 | G 1/8 | 10 | 30 | 23.5 | 25 | 12 | 8 | 14 |
| 1820415133 | G 1/4 | 15 | 45 | 34 | 36 | 21 | 10 | 17 |
| 1820415134 | G 1/4 | 20 | 60 | 33.5 | 36 | 21 | 10 | 17 |
| 1820415135 | G 1/4 | 25 | 75 | 33.2 | 36 | 21 | 10 | 17 |
| 1820415136 | G 1/4 | 30 | 90 | 32.5 | 36 | 21 | 10 | 17 |

*) Height for vacuum operation

### Max. curving on object R min

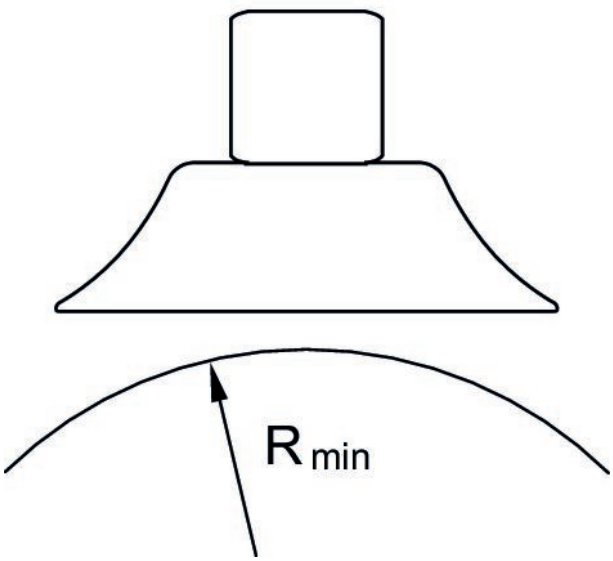

## Efficient pneumatic solutions, our program: cylinders and drives, valves and valve systems, air supply management, proportional pressure control valves

Visit us: **www.Emerson.com/aventics**
Your local contact: **Emerson.com/contactus**

Emerson.com
Facebook.com/EmersonAutomationSolutions
LinkedIn.com/company/Emerson-Automation-Solutions
Twitter.com/EMR_Automation

The Emerson logo is a trademark and service mark of Emerson Electric Co. AVENTICS is a registered trademark of one of the Emerson family of companies. All other trademarks are the property of their respective owners. © 2020 Emerson Electric Co. All rights reserved.

EMERSON.

CONSIDER IT SOLVED™