Series FSG

AVENTICS™

AVENTICS Series FSG Flat suction grippers

EMERSON™

Series FSG

AVENTICS Series FSG are round flat suction cups. FSG suction cups are the right choice for many standard applications with level, flat workpieces. Round, bellows suction cup with 2.5 folds for handling of extremely sensitive workpieces (optimum damping effect). Moreover, the special design of the folds permits use in systems with very short cycle times.

Product overview

Page

Flat suction gripper
Flat suction gripper, Series FSG, Ø 1,0 - 3,5 4
Flat suction gripper, Series FSG, Ø 5,0 - 10,0 7
Internal thread
Flat suction gripper, Series FSG, Ø 5,0 - 10,0 9
Internal thread Heat resistant
Flat suction gripper, Series FSG, Ø 5,0 - 10,0 11
External thread
Flat suction gripper, Series FSG, Ø 5,0 - 10,0 13
External thread Heat resistant
Flat suction gripper, Series FSG, Ø 15,0 - 150,0 15
Internal thread
Flat suction gripper, Series FSG, Ø 15,0 - 150,0 17
Internal thread Heat resistant
Flat suction gripper, Series FSG, Ø 15,0 - 95,0 19
External thread
Flat suction gripper, Series FSG, Ø 15,0 - 95,0 21
External thread Heat resistant
Flat suction gripper, Series FSG, Ø 15,0 - 95,0 23
Internal thread low-wear
Flat suction gripper, Series FSG, Ø 15,0 - 95,0 25
External thread low-wear

Flat suction gripper, Series FSG, Ø 1,0 - 3,5

Min. ambient temperature: -10 °C
Max. ambient temperature: 70 °C

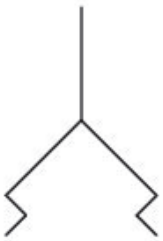

external diameter [mm]	Holding force [N]	Volume [cm³]	Delivery unit [piece]	Weight [kg]	Part No.
1	0.03	0.001	5	0.001	1820455105
1.5	0.06	0.001	5	0.001	1820455106
2	0.12	0.001	5	0.001	1820455107
3.5	0.42	0.002	5	0.001	1820455108

Fig. 1

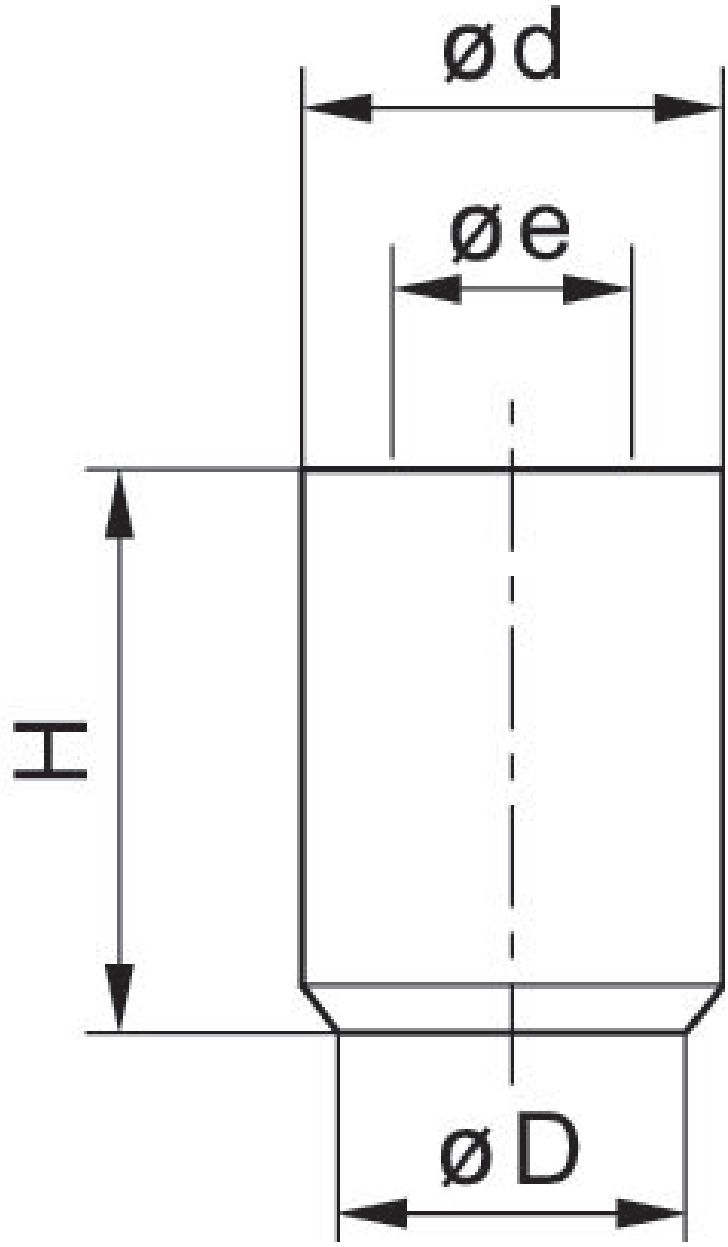

Part No.	ØD	Ø e	Ø d	Ha*)	H
1820455107	2	2	4	3.5	4
1820455108	3.5	2	4	3.5	4
tablefooter					

*) Height for vacuum operation

Part No.	ØD	Ø e	Ø d	H
1820455105	1	0.8	1.2	1.6

Part No.	ØD	Ø e	Ø d	H
1820455106	1.5	1.2	1.8	2.5

Max. curving on object R min

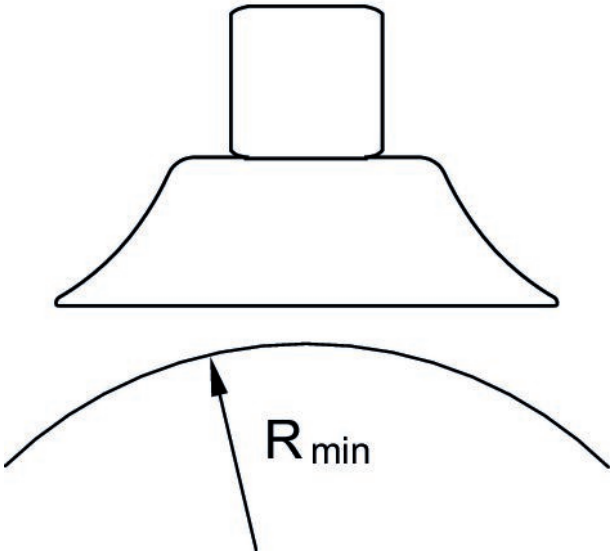

Flat suction gripper, Series FSG, Ø 5,0 - 10,0

Note: Internal thread
Compressed air connection type: Internal thread
Min. ambient temperature: -10 °C
Max. ambient temperature: 70 °C

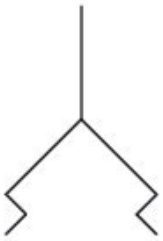

Compressed air connection	external diameter [mm]	Holding force [N]	Volume [cm³]	Delivery unit [piece]	Weight [kg]	Part No.
M5	5	0.75	0.005	2	0.0014	1820455049
M5	6	1.2	0.008	2	0.0014	1820455053
M5	8	2.3	0.03	2	0.0015	1820455057
G 1/8	10	4	0.07	2	0.0016	1820455061

Dimensions

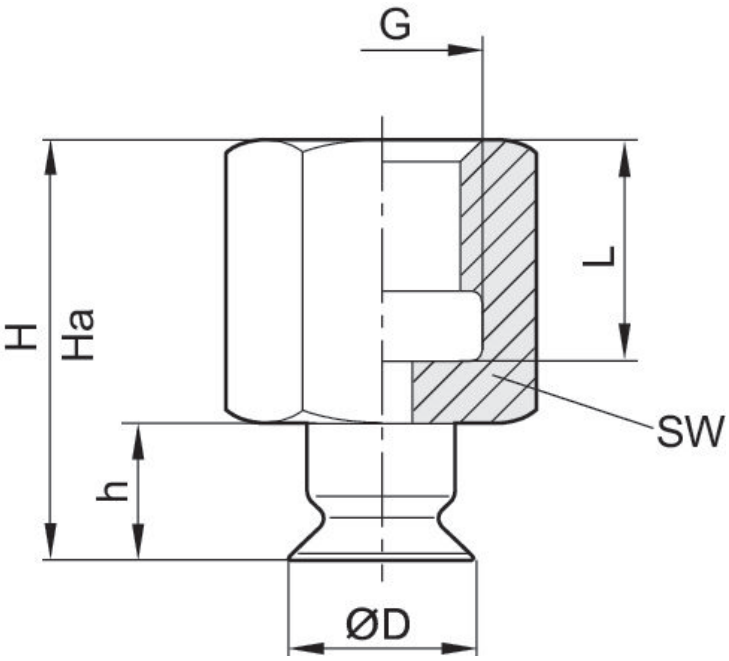

Part No.	ØD	G	Ha*)	H	h	L	SW
1820455049	5	M5	15.6	16.5	6.5	8.5	8
1820455053	6	M5	15.5	16.5	6.5	8.8	8
1820455057	8	M5	15.6	17	7	8.5	8
1820455061	10	G 1/8	22.2	23.5	7.5	13	14

*) Height for vacuum operation

Max. curving on object R min

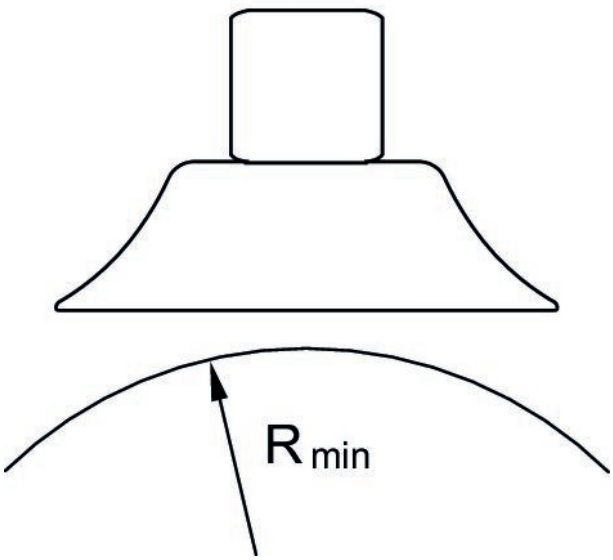

Flat suction gripper, Series FSG, Ø 5,0 - 10,0

Note: Internal thread, Heat resistant
Compressed air connection type: Internal thread
Temperature resistance: Heat resistant
Min. ambient temperature: -30 °C
Max. ambient temperature: 180 °C

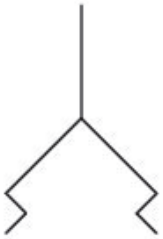

Compressed air connection	external diameter [mm]	Holding force [N]	Volume [cm³]	Delivery unit [piece]	Weight [kg]	Part No.
M5	5	0.75	0.005	2	0.0014	1820455051
M5	6	1.2	0.008	2	0.0014	1820455055
M5	8	2.3	0.03	2	0.0015	1820455059
G 1/8	10	4	0.07	2	0.0016	1820455063

Dimensions

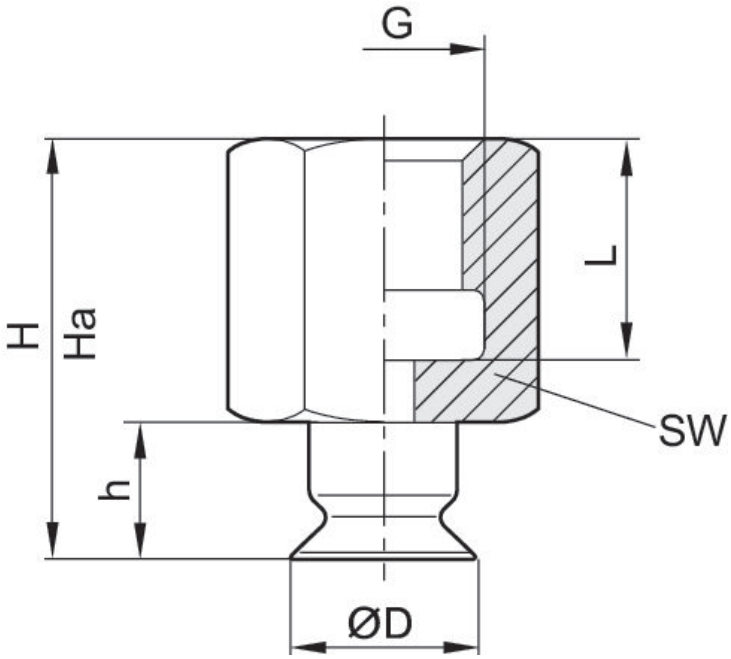

Part No.	ØD	G	Ha*)	H	h	L	SW
1820455051	5	M5	15.6	16.5	6.5	8.5	8
1820455055	6	M5	15.5	16.5	6.5	8.5	8
1820455059	8	M5	15.6	17	7	8.5	8
1820455063	10	G 1/8	22.2	23.5	7.5	13	14

*) Height for vacuum operation

Max. curving on object R min

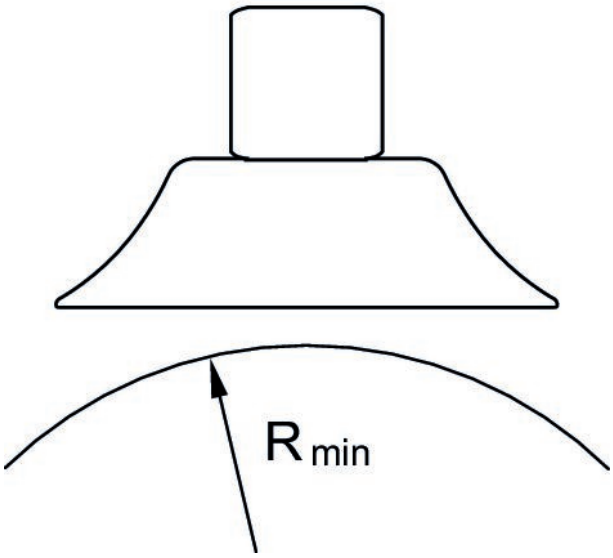

Flat suction gripper, Series FSG, Ø 5,0 - 10,0

Note: External thread
Compressed air connection type: External thread
Min. ambient temperature: -10 °C
Max. ambient temperature: 70 °C

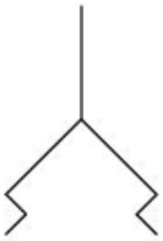

Compressed air connection	external diameter [mm]	Holding force [N]	Volume [cm³]	Delivery unit [piece]	Weight [kg]	Part No.
M5	5	0.75	0.005	2	0.0014	1820455050
M5	6	1.2	0.008	2	0.0014	1820455054
M5	8	2.3	0.03	2	0.0015	1820455058
G 1/8	10	4	0.07	2	0.0016	1820455062

Dimensions

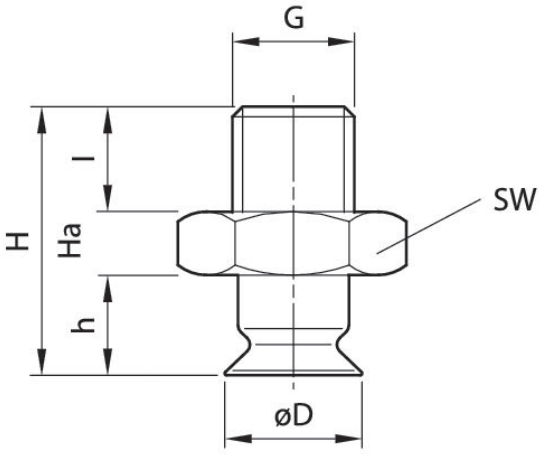

Part No.	ØD	G	Ha*)	H	h	SW	l
1820455050	5	M5	15.1	16	6.5	8	4.5
1820455054	6	M5	15	16	6.5	8	4.5
1820455058	8	M5	15.1	16.5	7	8	4.5
1820455062	10	G 1/8	19.2	20.5	7.5	14	8

*) Height for vacuum operation

Max. curving on object R min

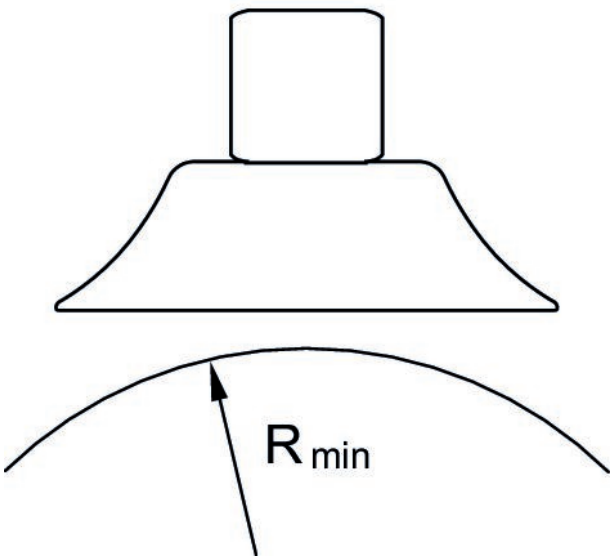

Flat suction gripper, Series FSG, Ø 5,0 - 10,0

Note: External thread, Heat resistant
Compressed air connection type: External thread
Temperature resistance: Heat resistant
Min. ambient temperature: -30 °C
Max. ambient temperature: 180 °C

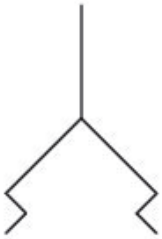

Compressed air connection	external diameter [mm]	Holding force [N]	Volume [cm³]	Delivery unit [piece]	Weight [kg]	Part No.
M5	5	0.75	0.005	2	0.0014	1820455052
M5	6	1.2	0.008	2	0.0014	1820455056
M5	8	2.3	0.03	2	0.0015	1820455060
G 1/8	10	4	0.07	2	0.0016	1820455064

Dimensions

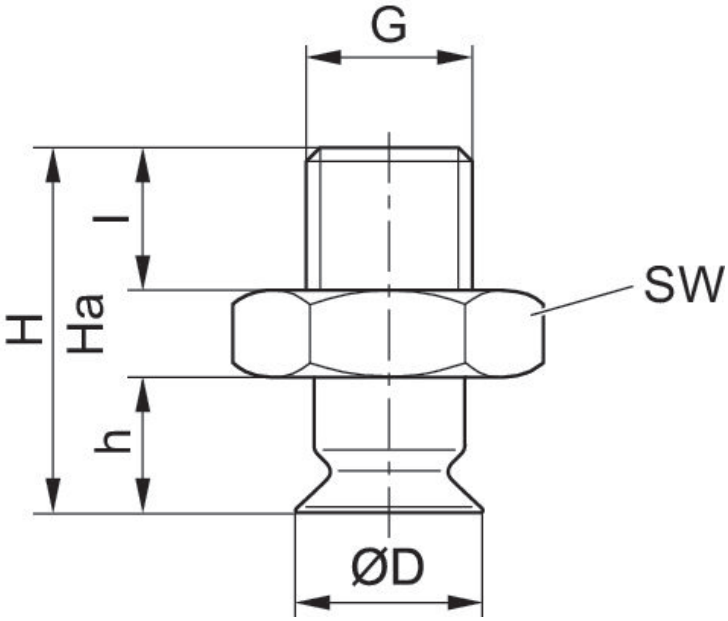

Part No.	ØD	G	Ha*)	H	h	SW	l
1820455052	5	M5	15.1	16	6.5	8	4.5
1820455056	6	M5	15	16	6.5	8	4.5
1820455060	8	M5	15.1	16.5	7	8	4.5
1820455064	10	G 1/8	19.2	20.5	7.5	14	8

*) Height for vacuum operation

Max. curving on object R min

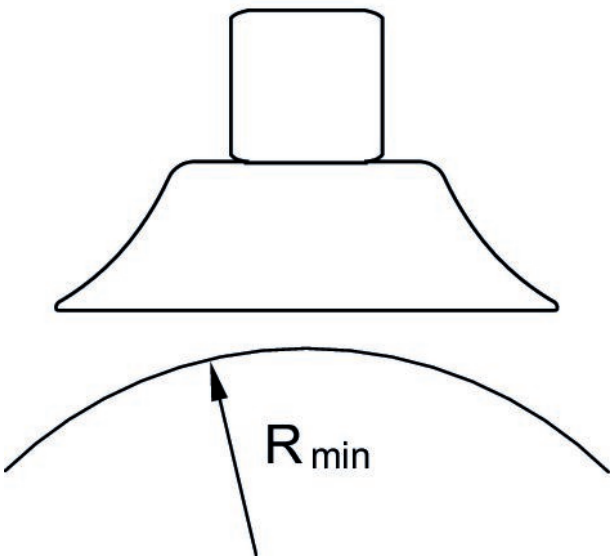

Flat suction gripper, Series FSG, Ø 15,0 - 150,0

Note: Internal thread
Compressed air connection type: Internal thread
Min. ambient temperature: -10 °C
Max. ambient temperature: 70 °C

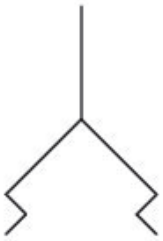

Compressed air connection	external diameter [mm]	Holding force [N]	Volume [cm³]	Delivery unit [piece]	Weight [kg]	Part No.
G 1/8	15	9	0.4	2	0.0045	1820455065
G 1/8	20	15.5	0.8	1	0.0056	1820455069
G 1/8	25	26.5	1.3	1	0.0085	1820455073
G 1/8	28.8	34	1.3	1	0.0092	1820455077
G 1/8	35	44	2.7	1	0.0119	1820455081
G 1/8	40	57.7	3.8	1	0.0135	1820455085
G 1/8	50	91	7	1	0.0173	1820455089
G 1/4	60	125	10	1	0.0369	1820455093
G 1/4	80	260	25	1	0.0652	1820455097
G 1/4	95	350	35	1	0.1049	1820455101
G 1/2	120	540	77.8	1	0.3526	1820415165
G 1/2	147.5	842	176.3	1	0.5214	1820415167

Dimensions

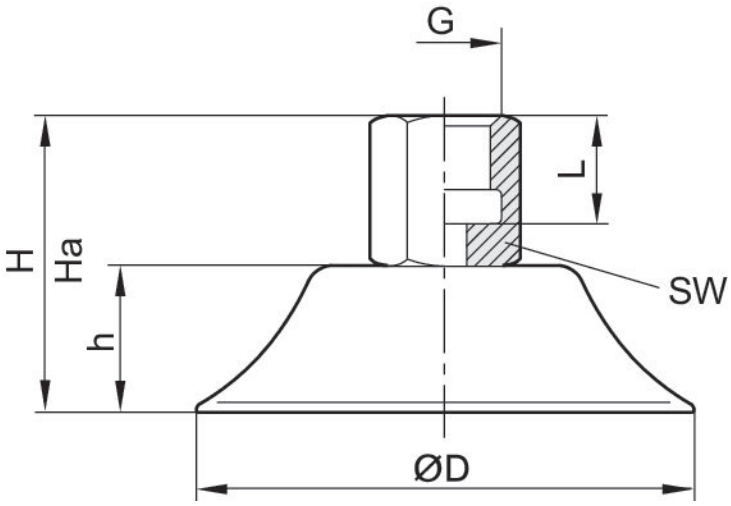

Part No.	ØD	G	Ha*)	H	h	L	SW
1820455065	15	G 1/8	22.1	24	8	13	14
1820455069	20	G 1/8	23.7	26	10	13	14
1820455073	25	G 1/8	27	30	14	13	14
1820455077	28.8	G 1/8	26	28	12	13	14
1820455081	35	G 1/8	27	30	14	13	14
1820455085	40	G 1/8	26.5	30	14	13	14
1820455089	50	G 1/8	27	31	15	13	14
1820455093	60	G 1/4	34	39	18.5	11	17
1820455097	80	G 1/4	37	41	20.5	11	17
1820455101	95	G 1/4	35.5	41.5	21.5	11	17
1820415165	120	G 1/2	30.5	36.5	23.5	13	–
1820415167	147.5	G 1/2	36.5	45.5	31	13	–

*) Height for vacuum operation

Max. curving on object R min

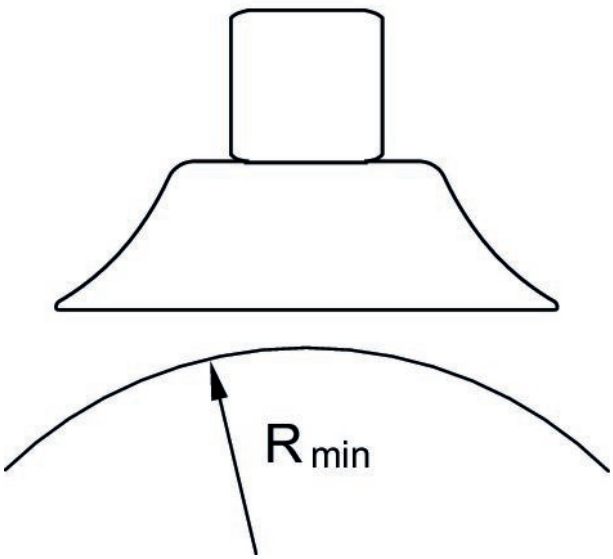

Flat suction gripper, Series FSG, Ø 15,0 - 150,0

Note: Internal thread, Heat resistant
Compressed air connection type: Internal thread
Temperature resistance: Heat resistant
Min. ambient temperature: -30 °C
Max. ambient temperature: 180 °C

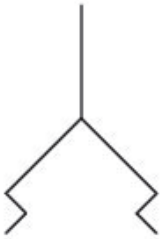

Compressed air connection	external diameter [mm]	Holding force [N]	Volume [cm³]	Delivery unit [piece]	Weight [kg]	Part No.
G 1/8	15	9	0.008	2	0.0045	1820455067
G 1/8	20	15.5	0.03	1	0.0056	1820455071
G 1/8	25	26.5	0.07	1	0.0085	1820455075
G 1/8	28.8	34	0.4	1	0.0092	1820455079
G 1/8	35	44	0.8	1	0.0119	1820455083
G 1/8	40	57.7	1.3	1	0.0135	1820455087
G 1/8	50	91	1.3	1	0.0173	1820455091
G 1/4	60	125	2.7	1	0.0369	1820455095
G 1/4	80	260	3.8	1	0.0652	1820455099
G 1/4	95	350	7	1	0.1049	1820455103
G 1/2	120	540	10	1	0.3526	1820415164
G 1/2	147.5	842	25	1	0.5214	1820415166

Dimensions

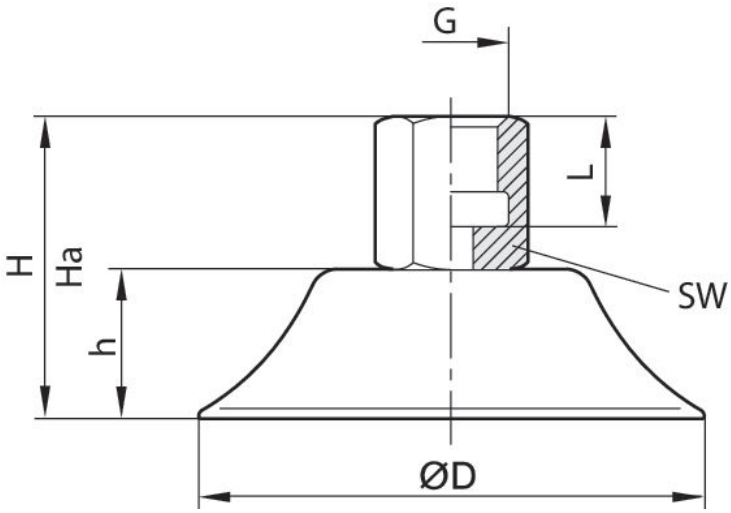

Part No.	Ø D	G	Ha*)	H	h	L	SW
1820455067	15	G 1/8	22.1	24	8	13	14
1820455071	20	G 1/8	23.7	26	10	13	14
1820455075	25	G 1/8	27	30	14	13	14
1820455079	28.8	G 1/8	26	28	12	13	14
1820455083	35	G 1/8	27	30	14	13	14
1820455087	40	G 1/8	26.5	30	14	13	14
1820455091	50	G 1/8	27	31	15	13	14
1820455095	60	G 1/4	34	39	18.5	11	17
1820455099	80	G 1/4	35	41	20.5	11	17
1820455103	95	G 1/4	35.5	41.5	21.5	11	17
1820415164	120	G 1/2	30.5	36.5	23.5	13	–
1820415166	147.5	G 1/2	36.5	45.5	31	13	–

*) Height for vacuum operation

Max. curving on object R min

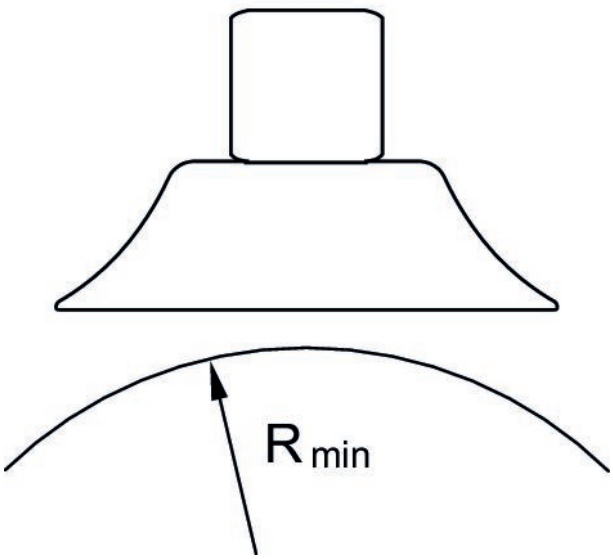

Flat suction gripper, Series FSG, Ø 15,0 - 95,0

Note: External thread
Compressed air connection type: External thread
Min. ambient temperature: -10 °C
Max. ambient temperature: 70 °C

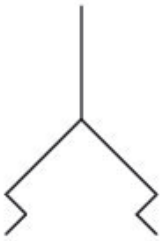

Compressed air connection	external diameter [mm]	Holding force [N]	Volume [cm³]	Delivery unit [piece]	Weight [kg]	Part No.
G 1/8	15	9	0.4	2	0.0058	1820455066
G 1/8	20	15.5	0.8	1	0.007	1820455070
G 1/8	25	26.5	1.3	1	0.0072	1820455074
G 1/8	28.8	34	1.3	1	0.0079	1820455078
G 1/8	35	44	2.7	1	0.0106	1820455082
G 1/8	40	57.7	3.8	1	0.0122	1820455086
G 1/8	50	91	7	1	0.0153	1820455090
G 1/4	60	125	10	1	0.0342	1820455094
G 1/4	80	260	25	1	0.0625	1820455098
G 1/4	95	350	35	1	0.1022	1820455102

Dimensions

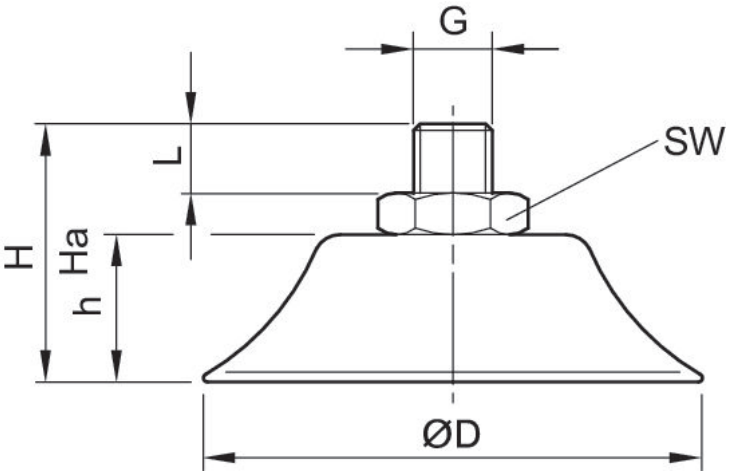

Part No.	ØD	G	Ha*)	H	h	L	SW
1820455066	15	G 1/8	19.1	21	8	8	14
1820455070	20	G 1/8	20.7	23	10	8	14
1820455074	25	G 1/8	24	27	14	8	14

Part No.	ØD	G	Ha*)	H	h	L	SW
1820455078	28.8	G 1/8	23	25	12	8	14
1820455082	35	G 1/8	24	27	14	8	14
1820455086	40	G 1/8	23.5	27	14	8	14
1820455090	50	G 1/8	24	28	15	8	14
1820455094	60	G 1/4	28	33	18.5	10	17
1820455098	80	G 1/4	29	35	20.5	10	17
1820455102	95	G 1/4	29.5	35.5	21.5	10	17

*) Height for vacuum operation

Max. curving on object R min

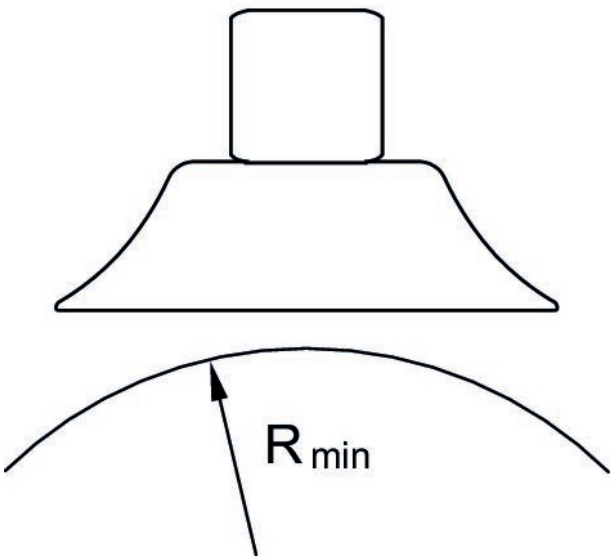

Flat suction gripper, Series FSG, Ø 15,0 - 95,0

Note: External thread, Heat resistant
Compressed air connection type: External thread
Temperature resistance: Heat resistant
Min. ambient temperature: -30 °C
Max. ambient temperature: 180 °C

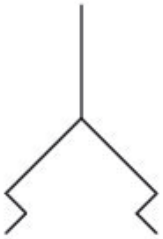

Compressed air connection	external diameter [mm]	Holding force [N]	Volume [cm³]	Delivery unit [piece]	Weight [kg]	Part No.
G 1/8	15	9	0.4	2	0.0058	1820455068
G 1/8	20	15.5	0.8	1	0.007	1820455072
G 1/8	25	26.5	1.3	1	0.0072	1820455076
G 1/8	28.8	34	1.3	1	0.0079	1820455080
G 1/8	35	44	2.7	1	0.0106	1820455084
G 1/8	40	57.7	3.8	1	0.0122	1820455088
G 1/8	50	91	7	1	0.0153	1820455092
G 1/4	60	125	10	1	0.0342	1820455096
G 1/4	80	260	25	1	0.0625	1820455100
G 1/4	95	350	35	1	0.1022	1820455104

Dimensions

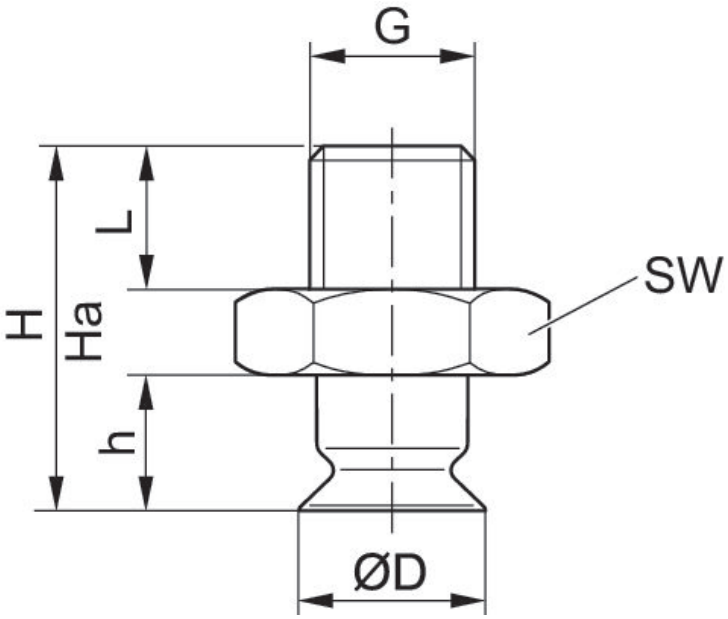

Part No.	ØD	G	Ha*)	H	h	L	SW
1820455068	15	G 1/8	19.1	21	8	8	14
1820455072	20	G 1/8	20.7	23	10	8	14
1820455076	25	G 1/8	24	27	14	8	14
1820455080	28.8	G 1/8	23	25	12	8	14
1820455084	35	G 1/8	24	27	14	8	14
1820455088	40	G 1/8	23.5	27	14	8	14
1820455092	50	G 1/8	24	28	15	8	14
1820455096	60	G 1/4	28	33	18.5	10	17
1820455100	80	G 1/4	29	35	20.5	10	17
1820455104	95	G 1/4	29.5	35.5	21.5	10	17

*) Height for vacuum operation

Max. curving on object R min

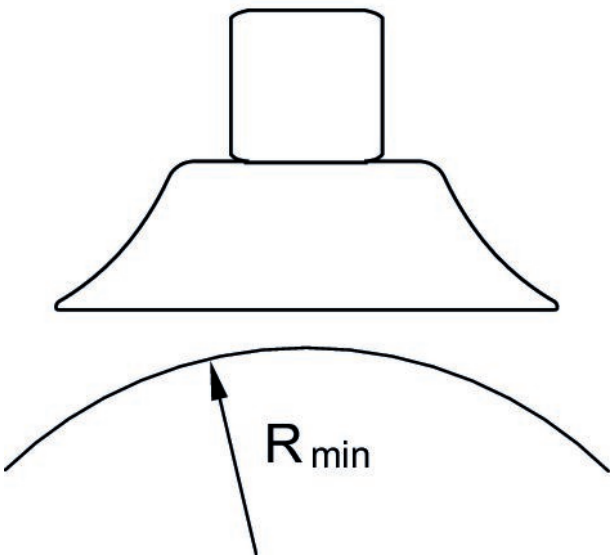

Flat suction gripper, Series FSG, Ø 15,0 - 95,0

Note: Internal thread, low-wear
Compressed air connection type: Internal thread
Min. ambient temperature: -40 °C
Max. ambient temperature: 80 °C

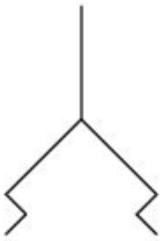

Compressed air connection	external diameter [mm]	Holding force [N]	Volume [cm³]	Delivery unit [piece]	Weight [kg]	Part No.
G 1/8	14.5	8.5	0.5	1	0.0077	1820415153
G 1/8	30	32	1.7	1	0.008	1820415154
G 1/4	50	95	6	1	0.0142	1820415155
G 1/4	60	130	15	1	0.0204	1820415172
G 1/4	80	260	30	1	0.0521	1820415156
G 1/4	95	350	42	1	0.0777	1820415157

Dimensions

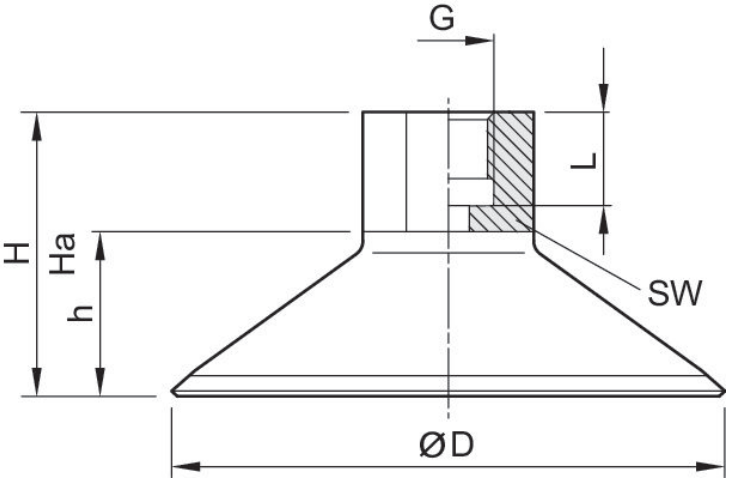

Part No.	ØD	G	H	Ha*)	h	L	SW
1820415153	14.5	G 1/8	25.5	24	9.5	9	14
1820415154	30	G 1/8	29	26	13	9	14
1820415155	50	G 1/4	32	27.5	17	12	17
1820415172	60	G 1/4	33.5	27.5	18.5	12	17
1820415156	80	G 1/4	40	34	25	12	22
1820415157	95	G 1/4	40	34	25	12	22

*) Height for vacuum operation

Max. curving on object R min

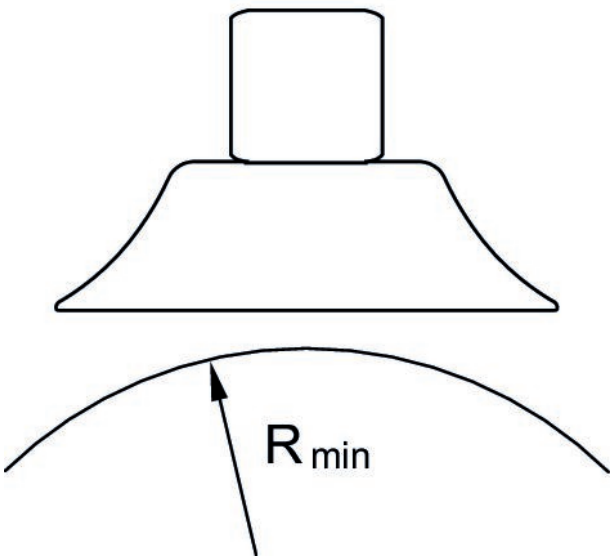

Flat suction gripper, Series FSG, Ø 15,0 - 95,0

Note: External thread, low-wear
Compressed air connection type: External thread
Min. ambient temperature: -40 °C
Max. ambient temperature: 80 °C

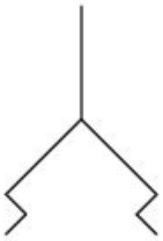

Compressed air connection	external diameter [mm]	Holding force [N]	Volume [cm³]	Delivery unit [piece]	Weight [kg]	Part No.
G 1/8	14.5	8.5	0.5	1	0.0064	1820455012
G 1/8	30	32	1.7	1	0.0064	1820455013
G 1/4	50	95	6	1	0.0149	1820455015
G 1/4	60	130	15	1	0.0211	1820415173
G 1/4	80	260	30	1	0.0472	1820455018
G 1/4	95	350	42	1	0.0728	1820455111

Dimensions

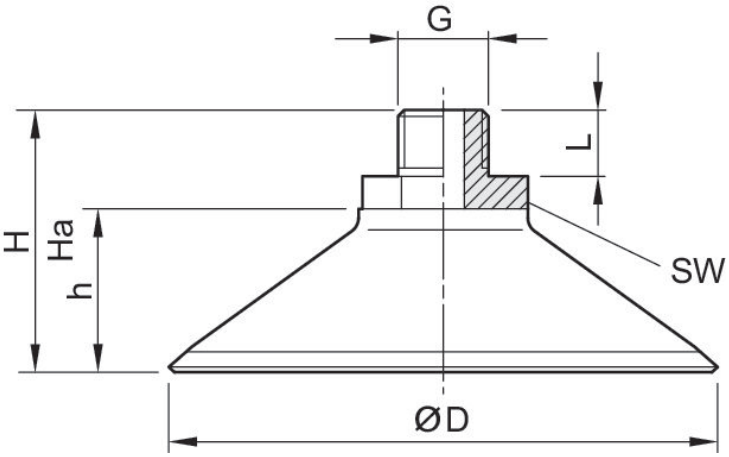

Part No.	ØD	G	H	Ha*)	h	L	SW
1820455012	14.5	G 1/8	22.5	21	9.5	8	14
1820455013	30	G 1/8	26	23	13	8	14
1820455015	50	G 1/4	32	27.5	17	10	17
1820415173	60	G 1/4	33.5	27.5	18.5	10	17
1820455018	80	G 1/4	40	34	25	10	22
1820455111	95	G 1/4	40	34	25	10	22

*) Height for vacuum operation

Max. curving on object R min

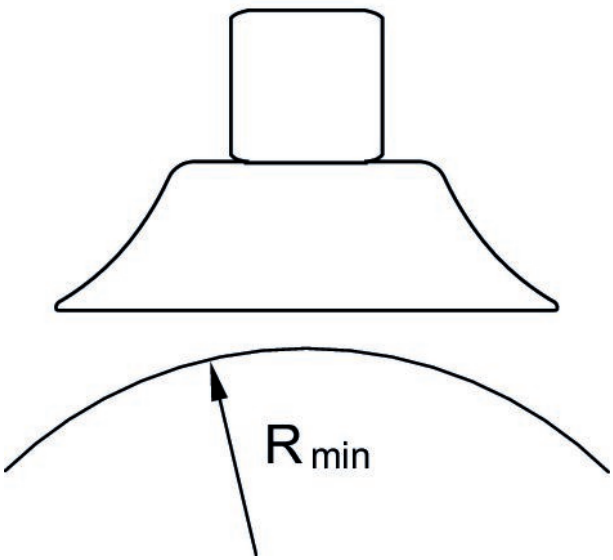

Efficient pneumatic solutions, our program: cylinders and drives, valves and valve systems, air supply management, proportional pressure control valves

Visit us: **www.Emerson.com/aventics**
Your local contact: **Emerson.com/contactus**

Emerson.com
Facebook.com/EmersonAutomationSolutions
LinkedIn.com/company/Emerson-Automation-Solutions
Twitter.com/EMR_Automation

The Emerson logo is a trademark and service mark of Emerson Electric Co. AVENTICS is a registered trademark of one of the Emerson family of companies. All other trademarks are the property of their respective owners. © 2020 Emerson Electric Co. All rights reserved.

EMERSON.

CONSIDER IT SOLVED™