Series BSG

AVENTICS™

AVENTICS Series BSG Bellow suction grippers

EMERSON™

Series BSG

AVENTICS Series BSG bellow suction grippers are suitable for workpieces with curved or inclined surfaces, as well as to compensate for height tolerances or to handle large-surface, non-rigid components such as large, thin sheets.

Product overview

Page

Bellow suction gripper
Bellow suction gripper, BSG series..... 4
Internal thread
Bellow suction gripper, BSG series..... 6
Internal thread Heat resistant
Bellow suction gripper, BSG series..... 8
External thread
Bellow suction gripper, BSG series..... 10
External thread Heat resistant
Bellow suction gripper, BSG series..... 12
Internal thread low-wear
Bellow suction gripper, BSG series..... 14
External thread low-wear

Bellow suction gripper, BSG series

Compressed air connection type: Internal thread
Min. ambient temperature: -10 °C
Max. ambient temperature: 70 °C

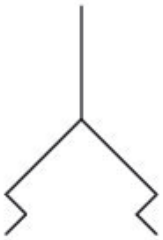

Compressed air connection	external diameter [mm]	Holding force [N]	Separation force [N]	Volume [cm³]	Delivery unit [piece]	Weight [kg]	Part No.
G 1/8	10.4	0.95	3.8	0.23	2	0.005	1820415032
G 1/8	15.6	2.3	6.7	0.75	2	0.006	1820415036
G 1/8	20	5.7	15.2	1.4	1	0.006	1820415040
G 1/4	30	13.6	39.6	4.75	1	0.016	1820415044
G 1/4	38	22.8	64.5	9.25	1	0.019	1820415048
G 1/4	50	51.3	95	26.25	1	0.027	1820415052
G 1/4	74	137.4	218	76	1	0.071	1820415056
G 1/2	111	280	570	330	1	0.425	2734110000
G 1/2	150	570	1000	800	1	0.91	2734150000

Dimensions

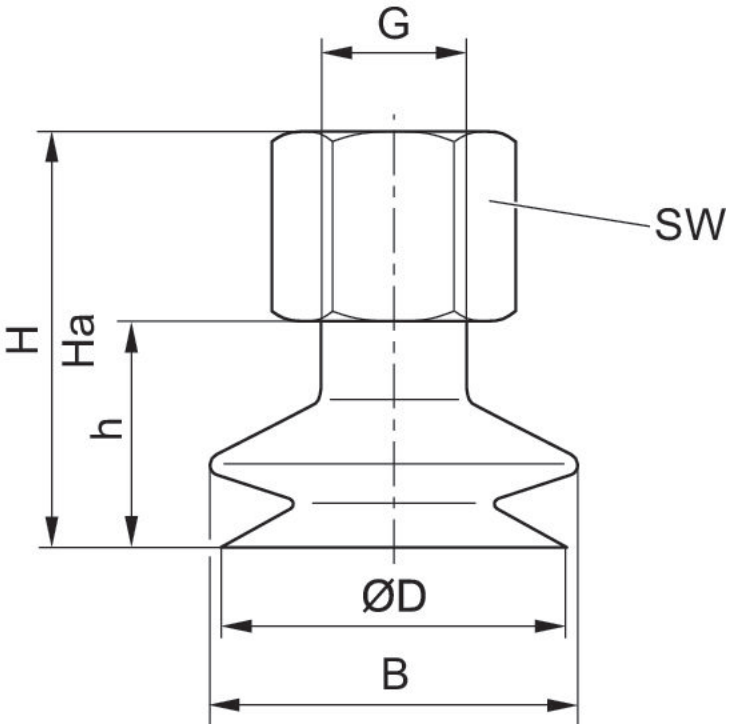

Part No.	ØD [mm]	G	Ha*)	H	h	B	SW
1820415032	10.4	G 1/8	24	28	16	12	14
1820415036	15.6	G 1/8	24	31	19	17	14
1820415040	20	G 1/8	25	31	19	24	14
1820415044	30	G 1/4	33	42	27	36	17
1820415048	38	G 1/4	33	43	28	46	17
1820415052	50	G 1/4	37	49	34	59	17
1820415056	74	G 1/4	48	62	47	83	21
2734110000	111	G 1/2	40.5	69.5	58	122	–
2734150000	150	G 1/2	52	89.5	77	167	–

*) Height for vacuum operation

Max. curving on object R min

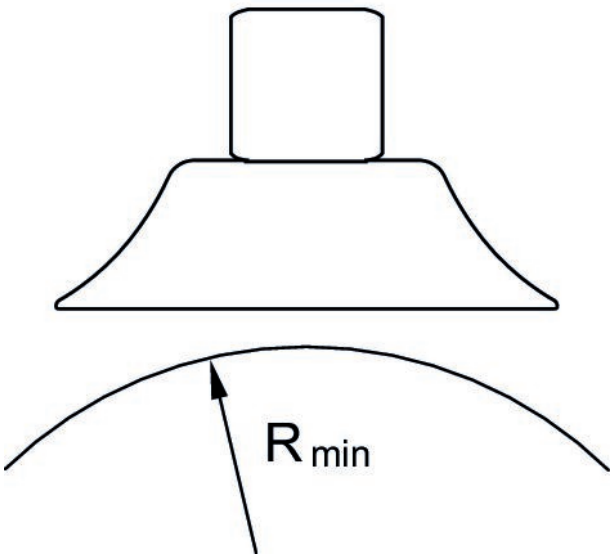

Bellow suction gripper, BSG series

Compressed air connection type: Internal thread
Temperature resistance: Heat resistant
Min. ambient temperature: -30 °C
Max. ambient temperature: 180 °C

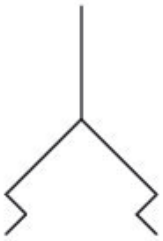

Compressed air connection	external diameter [mm]	Holding force [N]	Separation force [N]	Volume [cm³]	Delivery unit [piece]	Weight [kg]	Part No.
G 1/8	10.4	0.95	3.8	0.23	2	0.005	1820415030
G 1/8	15.6	2.3	6.7	0.75	2	0.0055	1820415034
G 1/8	20	5.7	15.2	1.4	1	0.0062	1820415038
G 1/4	30	13.6	39.6	4.75	1	0.016	1820415042
G 1/4	38	22.8	64.5	9.25	1	0.019	1820415046
G 1/4	50	51.3	95	26.25	1	0.027	1820415050
G 1/4	74	137.4	218	76	1	0.071	1820415054
G 1/2	111	280	570	330	1	0.425	2734110100
G 1/2	150	570	1000	800	1	0.91	2734150100

Dimensions

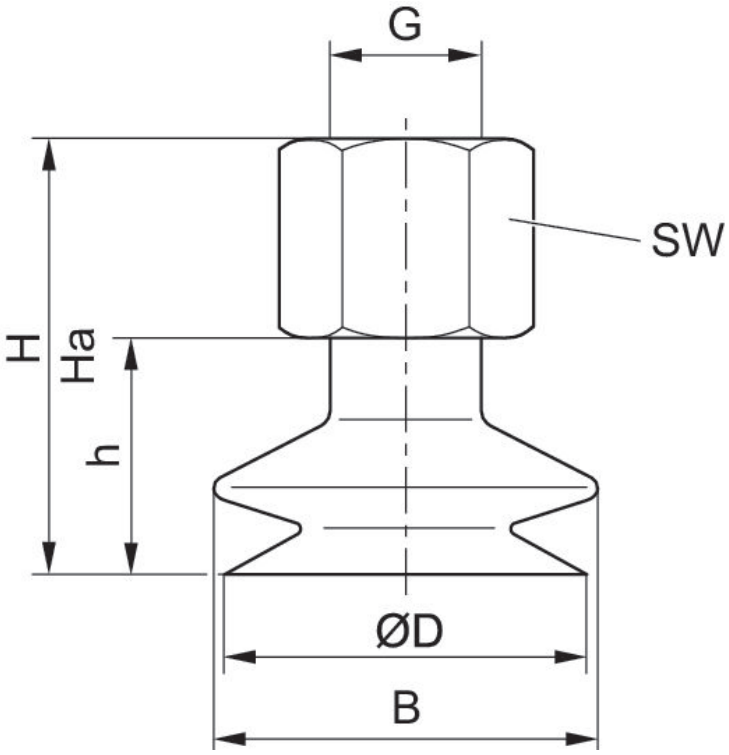

Part No.	ØD [mm]	G	Ha*)	H	h	B	SW
1820415030	10.4	G 1/8	24	28	16	12	14
1820415034	15.6	G 1/8	24	31	19	17	14
1820415038	20	G 1/8	25	31	19	24	14
1820415042	30	G 1/4	33	42	27	36	17
1820415046	38	G 1/4	33	43	28	46	17
1820415050	50	G 1/4	37	49	34	59	17
1820415054	74	G 1/4	48	62	47	83	21
2734110100	111	G 1/2	40.5	69.5	58	122	–
2734150100	150	G 1/2	52	89.5	77	167	–

*) Height for vacuum operation

Max. curving on object R min

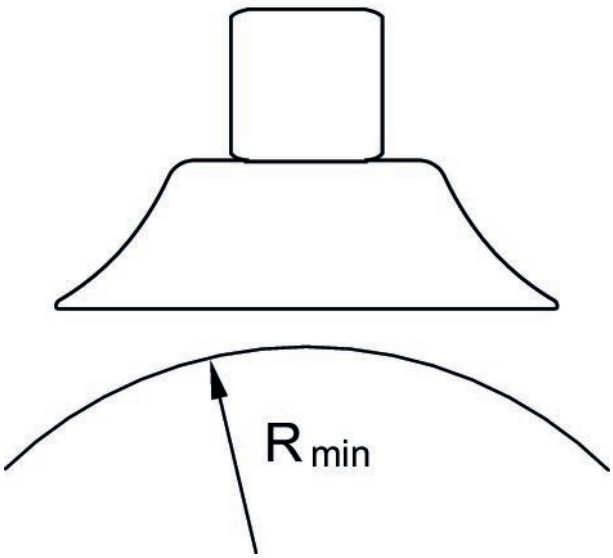

Bellow suction gripper, BSG series

Compressed air connection type: External thread
Min. ambient temperature: -10 °C
Max. ambient temperature: 70 °C

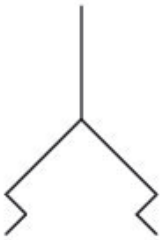

Compressed air connection	external diameter [mm]	Holding force [N]	Separation force [N]	Volume [cm³]	Delivery unit [piece]	Weight [kg]	Part No.
G 1/8	10.4	0.95	3.8	0.23	2	0.005	1820415031
G 1/8	15.6	2.3	6.7	0.75	2	0.006	1820415035
G 1/8	20	5.7	15.2	1.4	1	0.006	1820415039
G 1/4	30	13.6	39.6	4.75	1	0.016	1820415043
G 1/4	38	22.8	64.5	9.25	1	0.019	1820415047
G 1/4	50	51.3	95	26.25	1	0.027	1820415051
G 1/4	74	137.4	218	76	1	0.071	1820415055

Dimensions

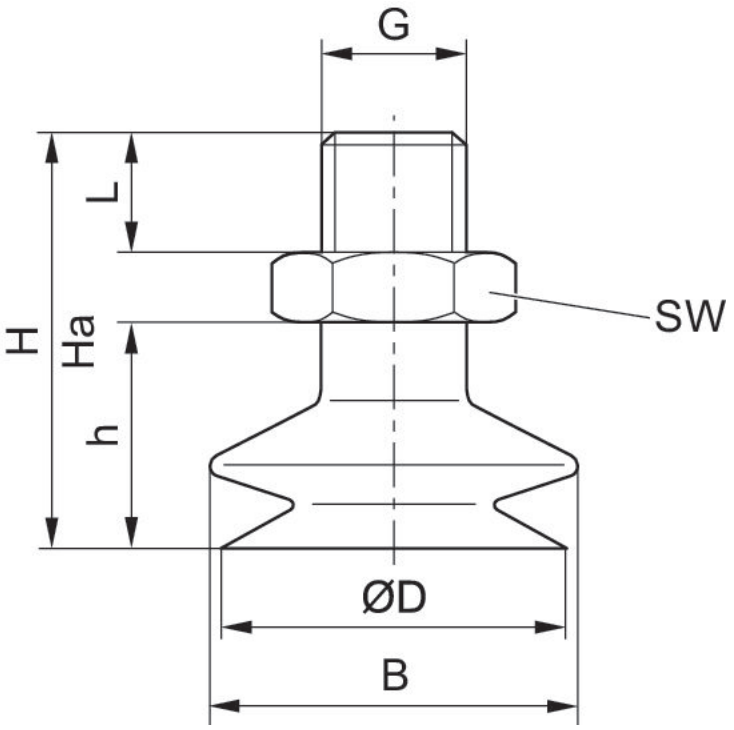

Part No.	ØD [mm]	G	Ha*)	H	h	B	SW	L
1820415031	10.4	G 1/8	25.5	29.5	16	12	14	7.5
1820415035	15.6	G 1/8	25.5	32.5	19	17	14	7.5
1820415039	20	G 1/8	27.5	32.5	19	24	14	7.5
1820415043	30	G 1/4	33	42	27	36	17	11
1820415047	38	G 1/4	33	43	28	46	17	11
1820415051	50	G 1/4	37	49	34	59	17	11
1820415055	74	G 1/4	50	64	47	83	21	11

*) Height for vacuum operation

Max. curving on object R min

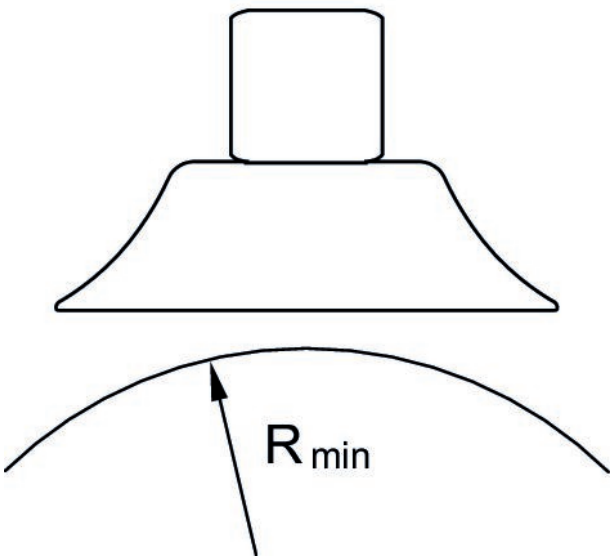

Bellow suction gripper, BSG series

Compressed air connection type: External thread
Temperature resistance: Heat resistant
Min. ambient temperature: -30 °C
Max. ambient temperature: 180 °C

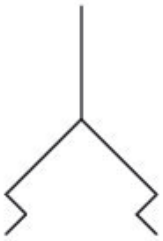

Compressed air connection	external diameter [mm]	Holding force [N]	Separation force [N]	Volume [cm³]	Delivery unit [piece]	Weight [kg]	Part No.
G 1/8	10.4	0.95	3.8	0.23	2	0.005	1820415029
G 1/8	15.6	2.3	6.7	0.75	2	0.006	1820415033
G 1/8	20	5.7	15.2	1.4	1	0.006	1820415037
G 1/4	30	13.6	39.6	4.75	1	0.016	1820415041
G 1/4	38	22.8	64.5	9.25	1	0.019	1820415045
G 1/4	50	51.3	95	26.25	1	0.027	1820415049
G 1/4	74	137.4	218	76	1	0.071	1820415053

Dimensions

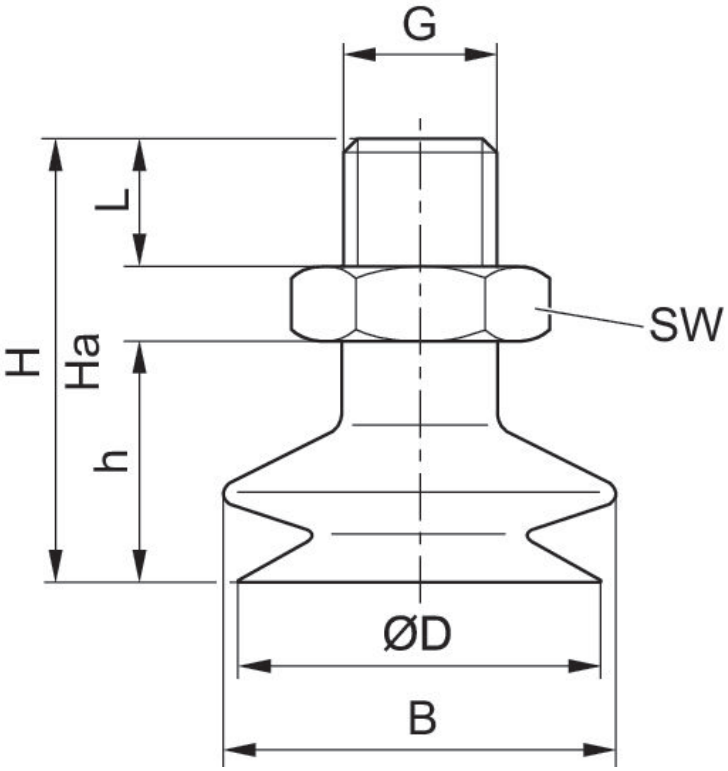

Part No.	ØD [mm]	G	Ha*)	H	h	B	SW	L
1820415029	10.4	G 1/8	25.5	29.5	16	12	14	7.5
1820415033	15.6	G 1/8	25.5	32.5	19	17	14	7.5
1820415037	20	G 1/8	27.5	32.5	19	24	14	7.5
1820415041	30	G 1/4	33	42	27	36	17	11
1820415045	38	G 1/4	33	43	28	46	17	11
1820415049	50	G 1/4	37	49	34	59	17	11
1820415053	74	G 1/4	50	64	47	83	21	11

*) Height for vacuum operation

Max. curving on object R min

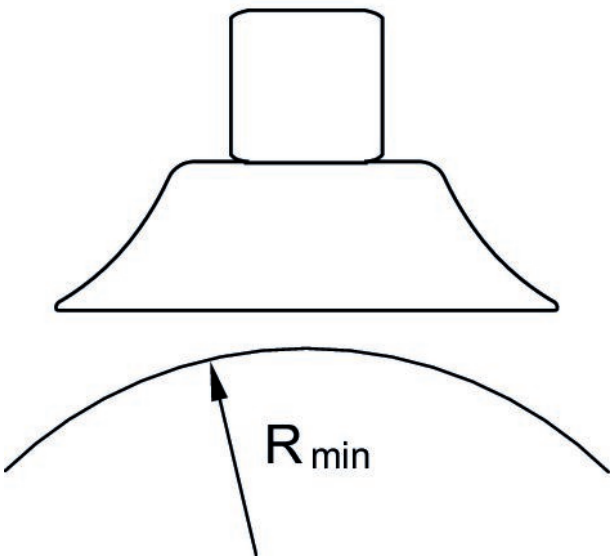

Bellow suction gripper, BSG series

Compressed air connection type: Internal thread
Min. ambient temperature: -40 °C
Max. ambient temperature: 80 °C

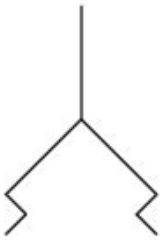

Compressed air connection	external diameter [mm]	Holding force [N]	Separation force [N]	Volume [cm³]	Delivery unit [piece]	Weight [kg]	Part No.
G 1/4	29	13.5	32	4.2	1	0.014	1820415158
G 1/4	38	33	56	11.3	1	0.016	1820415174
G 1/4	47	52	88	22.6	1	0.025	1820415176
G 1/4	59	75	120	31	1	0.038	1820415159
G 1/4	84	140	250	78	1	0.114	1820415160

Dimensions

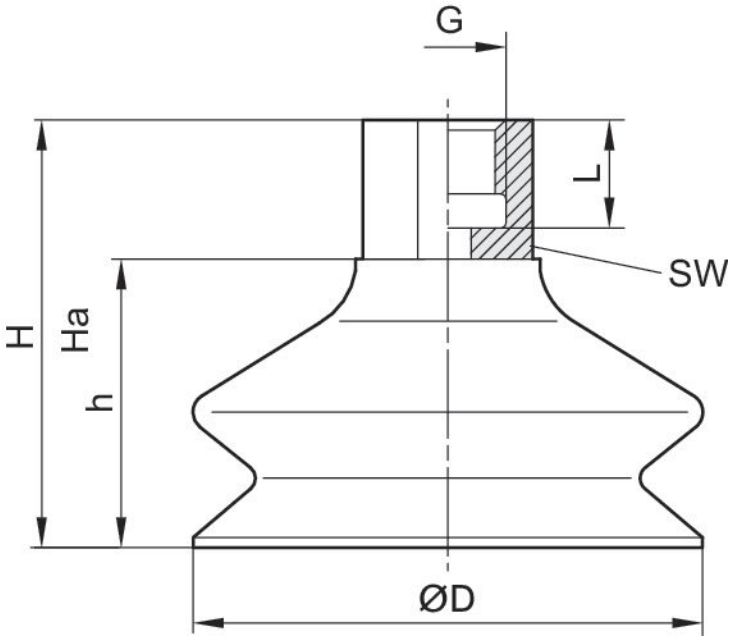

Part No.	ØD [mm]	G	Ha*)	H	h	L	SW
1820415158	29	G 1/4	33.5	42	27	12	17
1820415174	38	G 1/4	28.2	41	26	12	17
1820415176	47	G 1/4	33	47.5	32.5	12	17
1820415159	59	G 1/4	36.5	49	34	12	17
1820415160	84	G 1/4	47	62	47	12	22

*) Height for vacuum operation

Max. curving on object R min

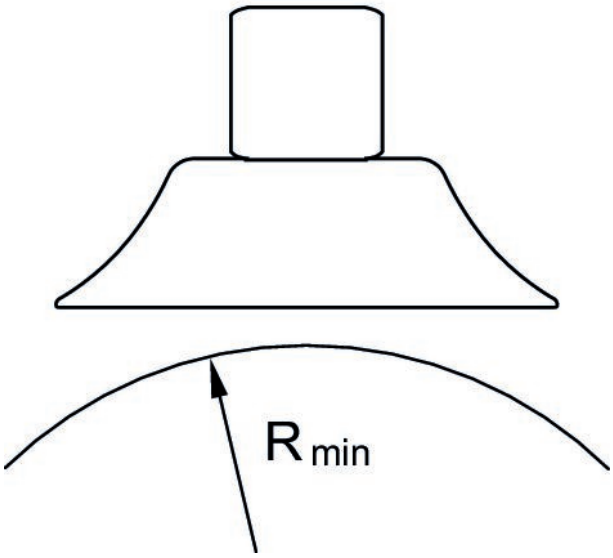

Bellow suction gripper, BSG series

Compressed air connection type: External thread
Min. ambient temperature: -40 °C
Max. ambient temperature: 80 °C

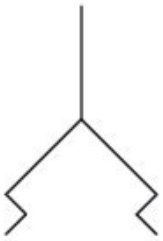

Compressed air connection	external diameter [mm]	Holding force [N]	Separation force [N]	Volume [cm³]	Delivery unit [piece]	Weight [kg]	Part No.
G 1/4	29	13.5	32	4.2	1	0.015	1820415115
G 1/4	38	33	56	11.3	1	0.017	1820415175
G 1/4	47	52	88	22.6	1	0.026	1820415177
G 1/4	59	75	120	31	1	0.038	1820415116
G 1/4	84	140	250	78	1	0.109	1820415117

Dimensions

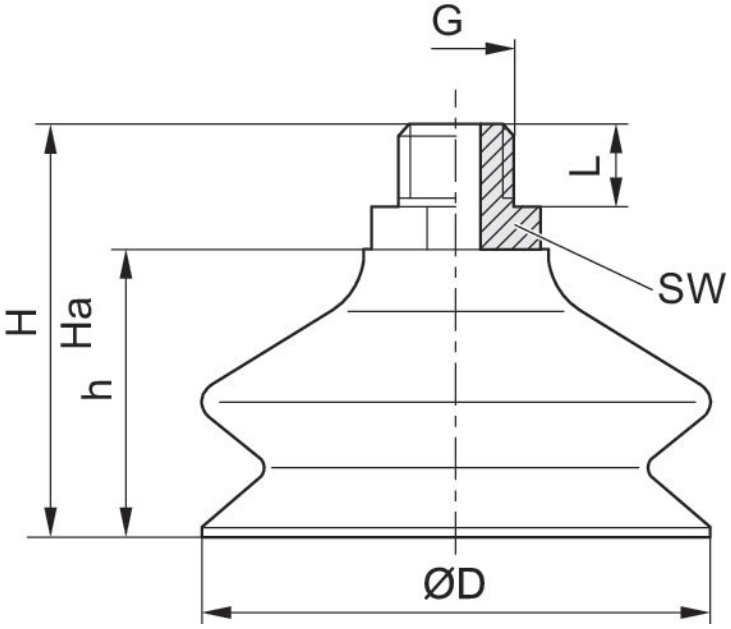

Part No.	ØD [mm]	G	Ha*)	H	h	L	SW
1820415115	29	G 1/4	33.5	42	27	10	17
1820415175	38	G 1/4	27.2	41	26	10	17
1820415177	47	G 1/4	33	47.5	32.5	10	17
1820415116	59	G 1/4	36.5	49	34	10	17
1820415117	84	G 1/4	47	62	47	10	22

*) Height for vacuum operation

Max. curving on object R min

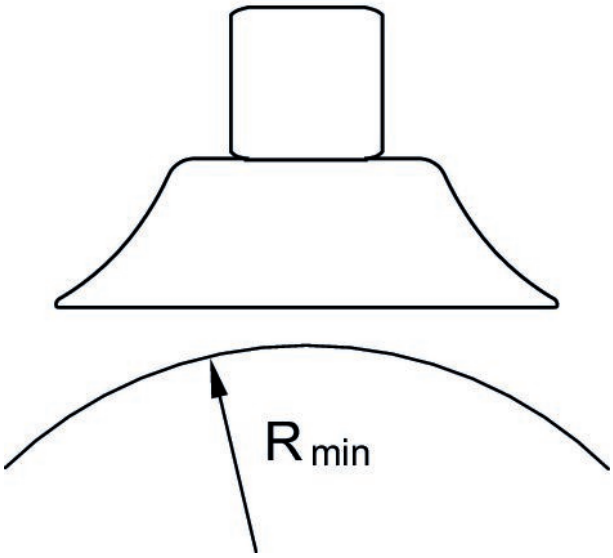

Efficient pneumatic solutions, our program: cylinders and drives, valves and valve systems, air supply management, proportional pressure control valves

Visit us: **www.Emerson.com/aventics**
Your local contact: **Emerson.com/contactus**

Emerson.com
Facebook.com/EmersonAutomationSolutions
LinkedIn.com/company/Emerson-Automation-Solutions
Twitter.com/EMR_Automation

The Emerson logo is a trademark and service mark of Emerson Electric Co. AVENTICS is a registered trademark of one of the Emerson family of companies. All other trademarks are the property of their respective owners. © 2020 Emerson Electric Co. All rights reserved.

EMERSON.

CONSIDER IT SOLVED™