Series BSA

AVENTICS™

AVENTICS Series BSA Bellow suction grippers

EMERSON™

Series BSA

AVENTICS Series BSA bellow suction grippers are suitable for workpieces with curved or inclined surfaces, as well as to compensate for height tolerances or to handle large-surface, non-rigid components such as large, thin sheets.

Product overview

Page

Bellow suction gripper
Bellow suction gripper, BSA series..... 4
Internal thread
Bellow suction gripper, BSA series..... 6
Internal thread Heat resistant
Bellow suction gripper, BSA series..... 8
External thread
Bellow suction gripper, BSA series..... 10
External thread Heat resistant
Bellow suction gripper, BSA series..... 13
Internal thread low-wear
Bellow suction gripper, BSA series..... 15
External thread low-wear

Bellow suction gripper, BSA series

Compressed air connection type: Internal thread
Min. ambient temperature: -10 °C
Max. ambient temperature: 70 °C

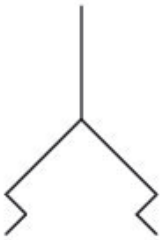

Compressed air connection	external diameter [mm]	Holding force [N]	Separation force [N]	Volume [cm³]	Delivery unit [piece]	Weight [kg]	Part No.
M5	5	0.1	0.8	0.033	2	0.0047	1820415168
G 1/8	5.9	0.1	0.9	0.04	2	0.005	1820415105
G 1/8	9	0.7	2.3	0.15	2	0.005	1820415073
G 1/8	14.5	1.2	5.7	0.98	2	0.006	1820415077
G 1/8	17.2	2.3	8.5	1.35	1	0.006	1820415081
G 1/8	20	3.8	12.1	2	1	0.007	1820415085
G 1/4	32	12	36.9	10	1	0.018	1820415089
G 1/4	42.6	13.6	44	19.5	1	0.03	1820415093
G 1/4	62.2	39.6	137	72.5	1	0.06	1820415097
G 1/4	89	45.2	286	165	1	0.17	1820415101

Dimensions

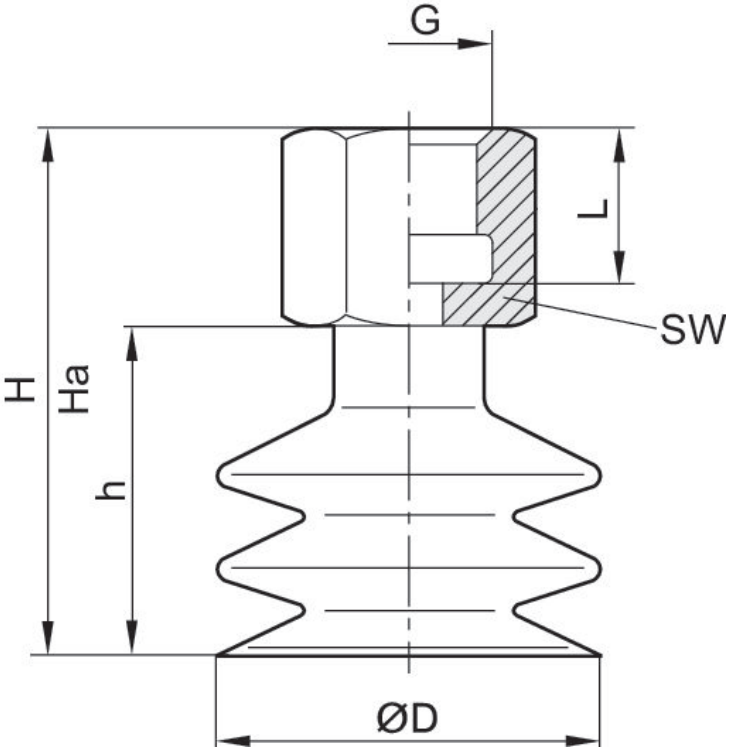

Part No.	ØD [mm]	G	Ha*)	H	h	L	SW
1820415168	5	M5	21	24	13.5	8.5	8
1820415105	5.9	G 1/8	22	26	14	9	14
1820415073	9	G 1/8	24	27	15	9	14
1820415077	14.5	G 1/8	25	34	22	9	14
1820415081	17.2	G 1/8	25	34	22	9	14
1820415085	20	G 1/8	25	34	22	9	14
1820415089	32	G 1/4	37.5	52.5	37.5	12	17
1820415093	42.6	G 1/4	41	61	46	12	17
1820415097	62.2	G 1/4	41	70	55	12	17
1820415101	89	G 1/4	69	103	88	12	21

*) Height for vacuum operation

Max. curving on object R min

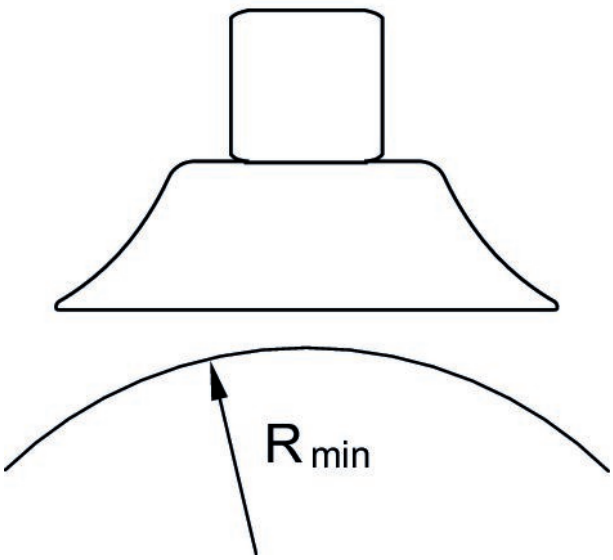

Bellow suction gripper, BSA series

Compressed air connection type: Internal thread
Temperature resistance: Heat resistant
Min. ambient temperature: -30 °C
Max. ambient temperature: 180 °C

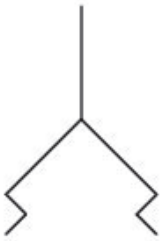

Compressed air connection	external diameter [mm]	Holding force [N]	Separation force [N]	Volume [cm³]	Delivery unit [piece]	Weight [kg]	Part No.
M5	5	0.1	0.8	0.033	2	0.0047	1820415170
G 1/8	5.9	0.1	0.9	0.04	2	0.005	1820415107
G 1/8	9	0.7	2.3	0.15	2	0.005	1820415075
G 1/8	14.5	1.2	5.7	0.98	2	0.006	1820415079
G 1/8	17.2	2.3	8.5	1.35	1	0.006	1820415083
G 1/8	20	3.8	12.1	2	1	0.007	1820415087
G 1/4	32	12	36.9	10	1	0.018	1820415091
G 1/4	42.6	13.6	44	19.5	1	0.03	1820415095
G 1/4	62.2	39.6	137	72.5	1	0.06	1820415099
G 1/4	89	45.2	286	165	1	0.17	1820415103

Dimensions

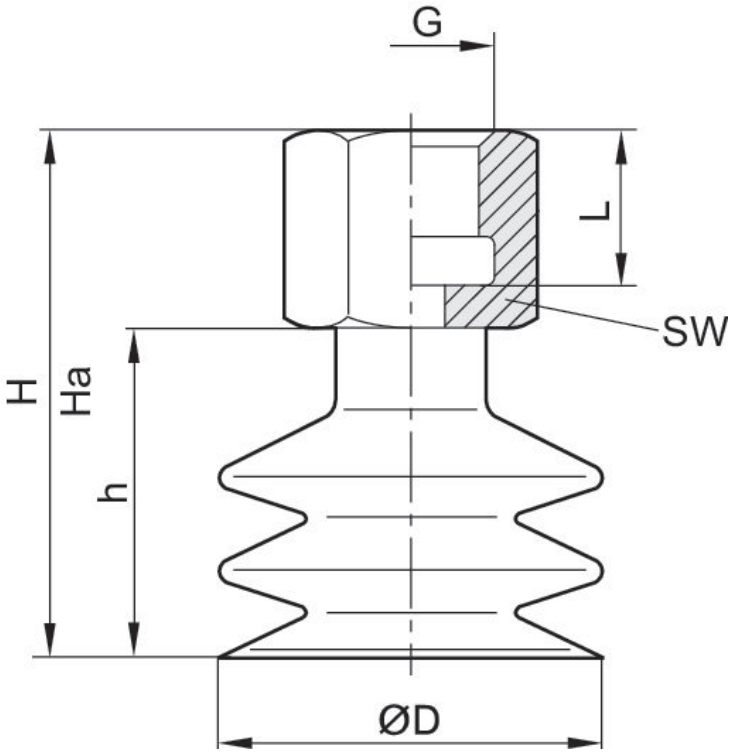

Part No.	ØD [mm]	G	Ha*)	H	h	L	SW
1820415170	5	M5	21	24	13.5	8.5	8
1820415107	5.9	G 1/8	22	26	14	9	14
1820415075	9	G 1/8	24	27	15	9	14
1820415079	14.5	G 1/8	25	34	22	9	14
1820415083	17.2	G 1/8	25	34	22	9	14
1820415087	20	G 1/8	25	34	22	9	14
1820415091	32	G 1/4	37.5	52.5	37.5	12	17
1820415095	42.6	G 1/4	41	61	46	12	17
1820415099	62.2	G 1/4	41	70	55	12	17
1820415103	89	G 1/4	69	103	88	12	21

*) Height for vacuum operation

Max. curving on object R min

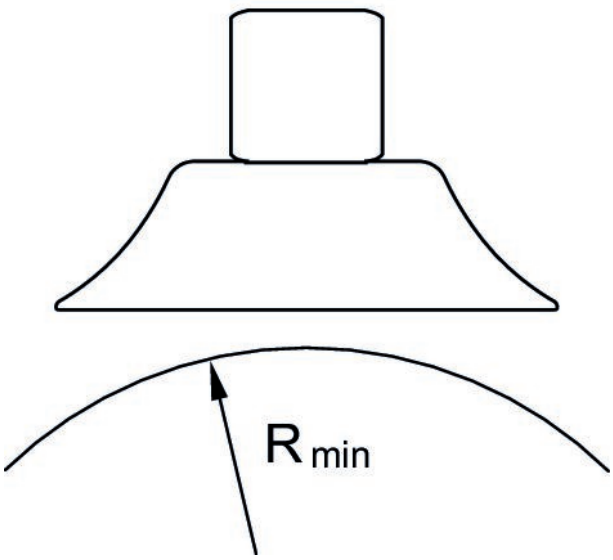

Bellow suction gripper, BSA series

Compressed air connection type: External thread
Min. ambient temperature: -10 °C
Max. ambient temperature: 70 °C

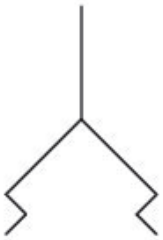

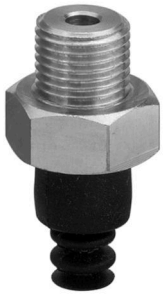

Compressed air connection	external diameter [mm]	Holding force [N]	Separation force [N]	Volume [cm³]	Delivery unit [piece]	Weight [kg]	Part No.
M5	5	0.1	0.8	0.033	2	0.0047	1820415169
G 1/8	5.9	0.1	0.9	0.04	2	0.005	1820415106
G 1/8	9	0.7	2.3	0.15	2	0.005	1820415074
G 1/8	14.5	1.2	5.7	0.98	2	0.006	1820415078
G 1/8	17.2	2.3	8.5	1.35	1	0.006	1820415082
G 1/8	20	3.8	12.1	2	1	0.007	1820415086
G 1/4	32	12	36.9	10	1	0.017	1820415090
G 1/4	42.6	13.6	44	19.5	1	0.027	1820415094
G 1/4	62.2	39.6	137	72.5	1	0.06	1820415098
G 1/4	89	45.2	286	165	1	0.18	1820415102

Dimensions

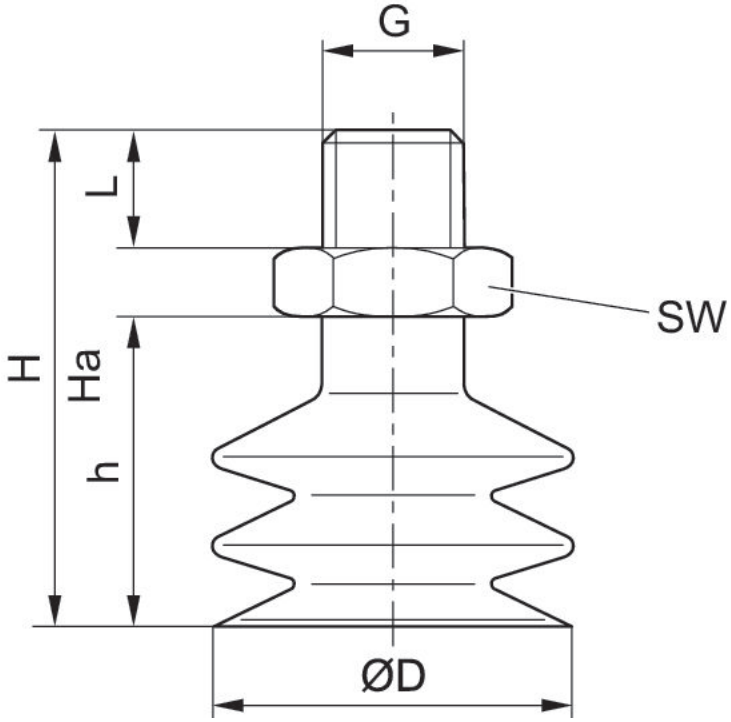

Part No.	ØD [mm]	G	Ha*)	H	h	SW	L
1820415169	5	M5	21	24	13.5	8	5
1820415106	5.9	G 1/8	23.5	27.5	14	14	7.5
1820415074	9	G 1/8	25.5	28.5	15	14	7.5
1820415078	14.5	G 1/8	26.5	35.5	22	14	7.5
1820415082	17.2	G 1/8	26.5	35.5	22	14	7.5
1820415086	20	G 1/8	26.5	35.5	22	14	7.5
1820415090	32	G 1/4	37.5	52.5	37.5	17	11
1820415094	42.6	G 1/4	41	61	46	17	11
1820415098	62.2	G 1/4	41	70	55	17	11
1820415102	89	G 1/4	69	103	88	21	11

*) Height for vacuum operation

Max. curving on object R min

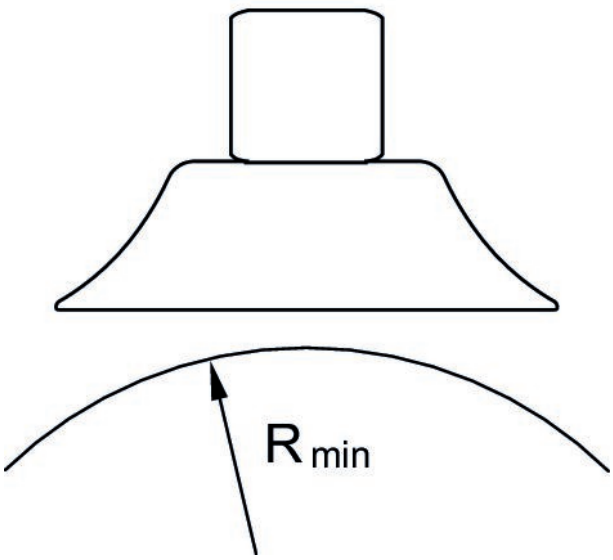

Bellow suction gripper, BSA series

Compressed air connection type: External thread
Temperature resistance: Heat resistant
Min. ambient temperature: -30 °C
Max. ambient temperature: 180 °C

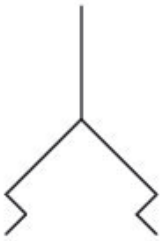

Compressed air connection	external diameter [mm]	Holding force [N]	Separation force [N]	Volume [cm³]	Delivery unit [piece]	Weight [kg]	Part No.
M5	5	0.1	0.8	0.033	2	0.0047	1820415171
G 1/8	5.9	0.1	0.9	0.04	2	0.005	1820415108
G 1/8	9	0.7	2.3	0.15	2	0.005	1820415076
G 1/8	14.5	1.2	5.7	0.98	2	0.006	1820415080
G 1/8	17.2	2.3	8.5	1.35	1	0.006	1820415084
G 1/8	20	3.8	12.1	2	1	0.007	1820415088
G 1/4	32	12	36.9	10	1	0.017	1820415092
G 1/4	42.6	13.6	44	19.5	1	0.027	1820415096
G 1/4	62.2	39.6	137	72.5	1	0.06	1820415100
G 1/4	89	45.2	286	165	1	0.18	1820415104

Dimensions

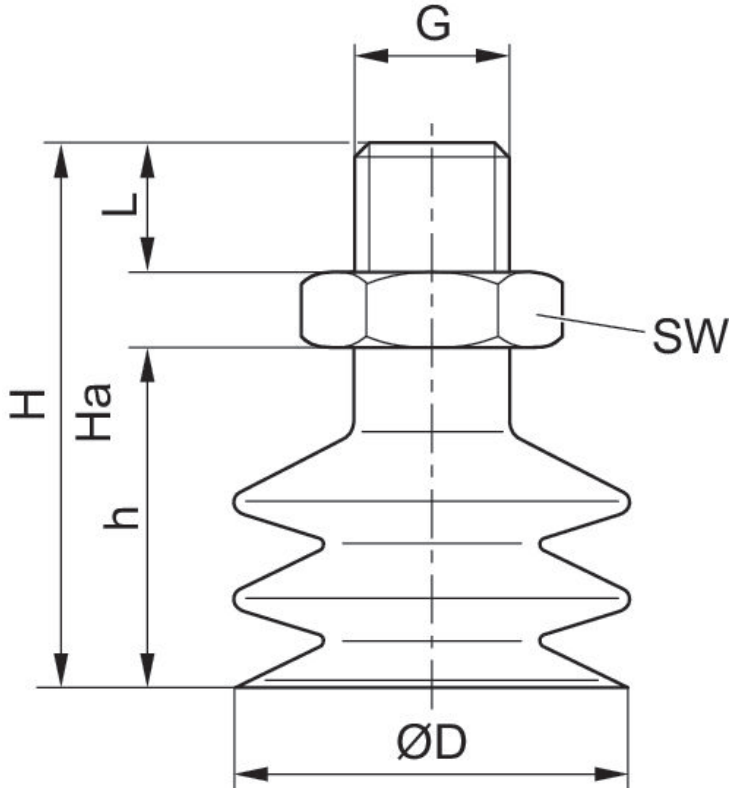

Part No.	ØD	G	Ha*)	H	h	SW	L
1820415171	5	M5	21	24	13.5	8	5
1820415108	5.9	G 1/8	23.5	27.5	14	14	7.5
1820415076	9	G 1/8	25.5	28.5	15	14	7.5
1820415080	14.5	G 1/8	26.5	35.5	22	14	7.5
1820415084	17.2	G 1/8	26.5	35.5	22	14	7.5
1820415088	20	G 1/8	26.5	35.5	22	14	7.5
1820415092	32	G 1/4	37.5	52.5	37.5	17	11
1820415096	42.6	G 1/4	41	61	46	17	11
1820415100	62.2	G 1/4	41	70	55	17	11
1820415104	89	G 1/4	69	103	88	21	11

*) Height for vacuum operation

Max. curving on object R min

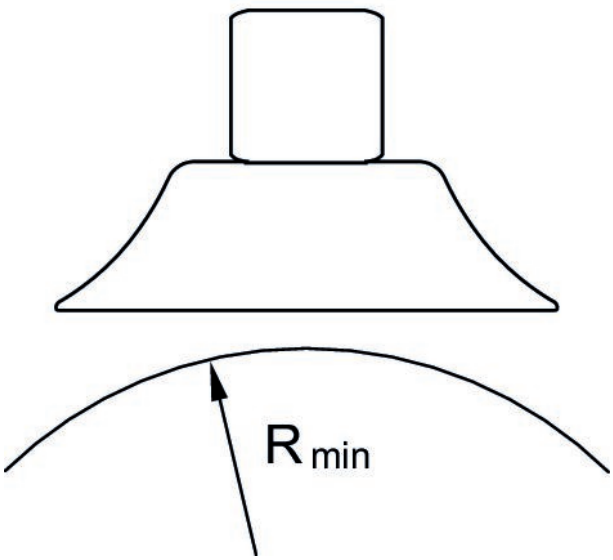

Bellow suction gripper, BSA series

Compressed air connection type: Internal thread
Min. ambient temperature: -40 °C
Max. ambient temperature: 80 °C

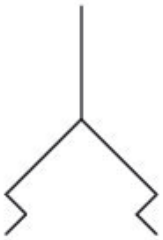

Compressed air connection	external diameter [mm]	Holding force [N]	Separation force [N]	Volume [cm³]	Delivery unit [piece]	Weight [kg]	Part No.
G 1/4	29	13.5	32	9	1	0.017	1820415161
G 1/4	59	61	100	61	1	0.047	1820415162
G 1/4	80.2	120	250	195	1	0.145	1820415163

Dimensions

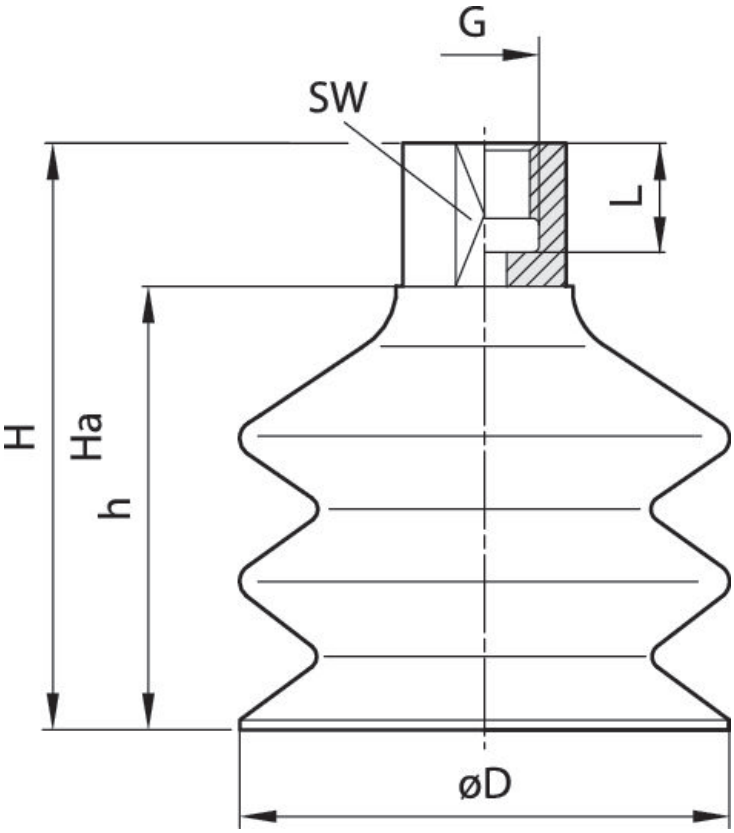

Part No.	ØD [mm]	G	Ha*)	H	h	SW	L
1820415161	29	G 1/4	40	55	40	17	12
1820415162	59	G 1/4	40	70	55	17	12

Part No.	ØD [mm]	G	Ha*)	H	h	SW	L
1820415163	80.2	G 1/4	62	100	85	22	12

*) Height for vacuum operation

Max. curving on object R min

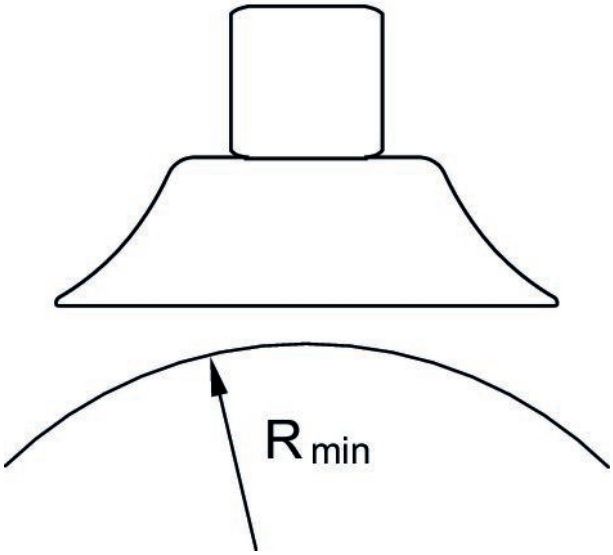

Bellow suction gripper, BSA series

Compressed air connection type: External thread
Min. ambient temperature: -40 °C
Max. ambient temperature: 80 °C

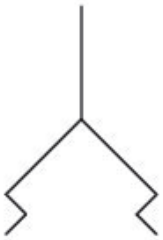

Compressed air connection	external diameter [mm]	Holding force [N]	Separation force [N]	Volume [cm³]	Delivery unit [piece]	Weight [kg]	Part No.
G 1/4	29	13.5	32	9	1	0.017	1820415010
G 1/4	59	61	100	61	1	0.047	1820415013
G 1/4	80.2	120	250	195	1	0.145	1820415014

Dimensions

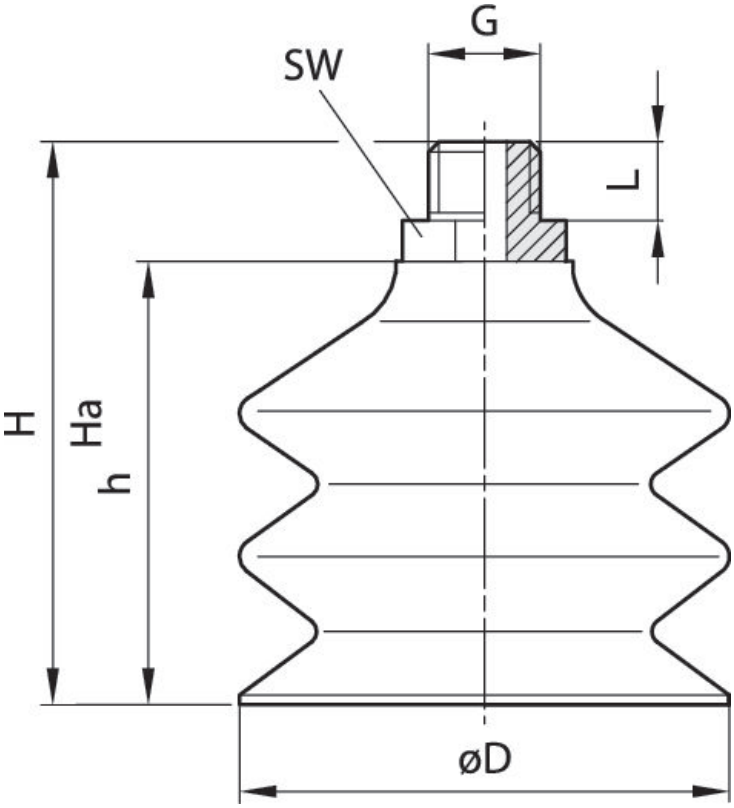

Part No.	ØD [mm]	G	Ha*)	H	h	SW	L
1820415010	29	G 1/4	40	55	40	17	10
1820415013	59	G 1/4	40	70	55	17	10
1820415014	80.2	G 1/4	62	100	85	22	10

*) Height for vacuum operation

Max. curving on object R min

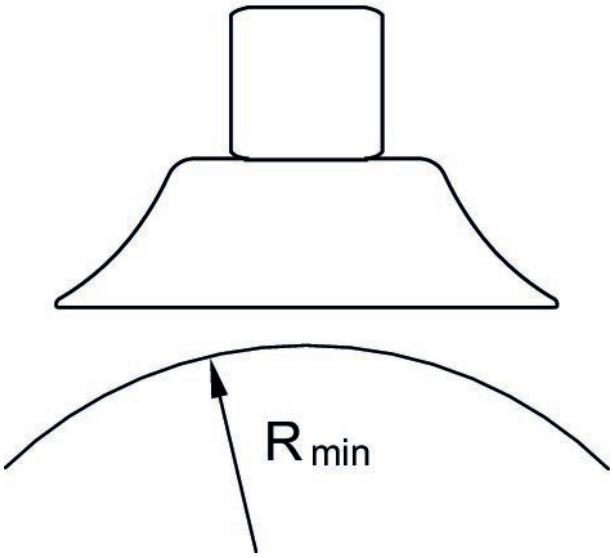

Efficient pneumatic solutions, our program: cylinders and drives, valves and valve systems, air supply management, proportional pressure control valves

Visit us: **www.Emerson.com/aventics**
Your local contact: **Emerson.com/contactus**

Emerson.com
Facebook.com/EmersonAutomationSolutions
LinkedIn.com/company/Emerson-Automation-Solutions
Twitter.com/EMR_Automation

The Emerson logo is a trademark and service mark of Emerson Electric Co. AVENTICS is a registered trademark of one of the Emerson family of companies. All other trademarks are the property of their respective owners. © 2020 Emerson Electric Co. All rights reserved.

EMERSON.

CONSIDER IT SOLVED™