Vacuum accessories

AVENTICS™ Vacuum accessories

EMERSON™

Vacuum accessories

AVENTICS offers a broad range of vacuum accessories as vacuum filters, angle joints, mufflers and many more. Efficient, trouble-free continuous operation of a vacuum system requires loss-free distribution of high-quality operating air. Special vacuum filters are used to reliably protect the vacuum generators from contamination and damage due to external influences. As a prefilter or microfilter, they can be equipped in two different pore widths for various degrees of contamination. In systems with multiple vacuum cups and a central vacuum generator, aluminium distributors with integrated mounting options distribute the compressed air and vacuum

Product overview

Page

Accessories overview

Vacuum filter Inline, Series VFI 4
Vacuum filter, cup version, Series VFC 7
replacement filter, Series VFI 9
for Vacuum filter Inline
replacement filter, Series VFC 11
Vacuum filter Inline, Series VFI 12
Flow valve, Series VCK 14
Mounting bracket 16
Angle joint, Series AJT 17
Reservoir, Series VFC 18
Orifice plugs 21
Spring-loaded plunger, Series PSL 22
Spring-loaded plunger, Series PSL 23

Vacuum filter Inline, Series VFI

Min. ambient temperature: 0 °C
Max. ambient temperature: 50 °C

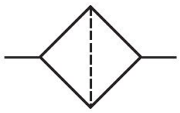

Type	Nominal flow [l/min]	Filter porosity [µm]	Filter insert	Part No.
VFI-6/4	32	50	Polypropylene, Polyamide	R412010112
VFI-8/6	66	50	Polypropylene, Polyamide	R412010113

Dimensions

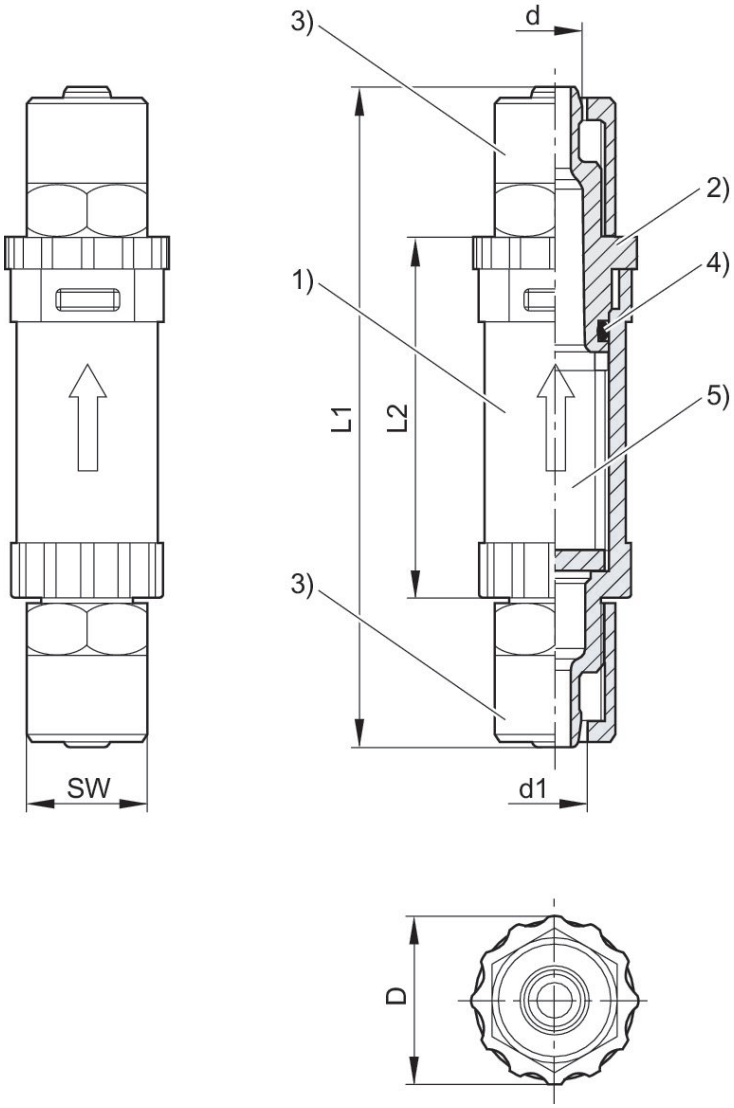

1) "transparent inline filter housing "
2) filter cover with bayonet catch
3) tube nut
4) O-ring
5) Filter

Part No.	Type	External Ø	Internal Ø	d	d1	D	L1	L2	SW
R412010112	VFI-6/4	6 mm	4 mm	4	6.2	16	62	34	12
R412010113	VFI-8/6	8 mm	6 mm	6	8.2	23	70	41	14

characteristics (flow volume)

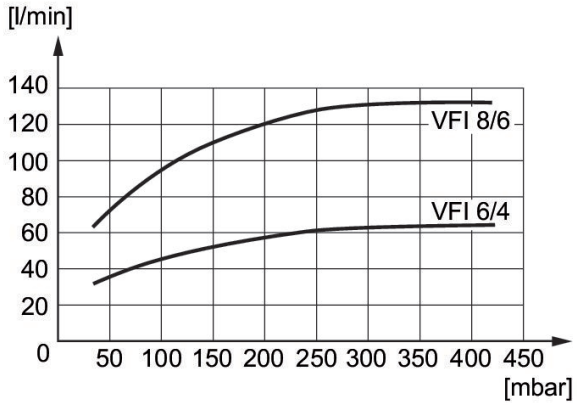

Vacuum filter, cup version, Series VFC

Min. ambient temperature: 5 °C
Max. ambient temperature: 52 °C

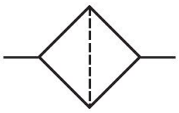

Port	Nominal flow [l/min]	Filter porosity [µm]	Filter insert	Part No.
G 1/8	45	80	Polyethylene	0821305181
G 1/4	110	80	Polyethylene	0821305182
G 3/8	245	80	Polyethylene	0821305183
G 1/2	300	80	Polyethylene	0821305184
G 3/4	600	80	Polyethylene	0821305185

Dimensions

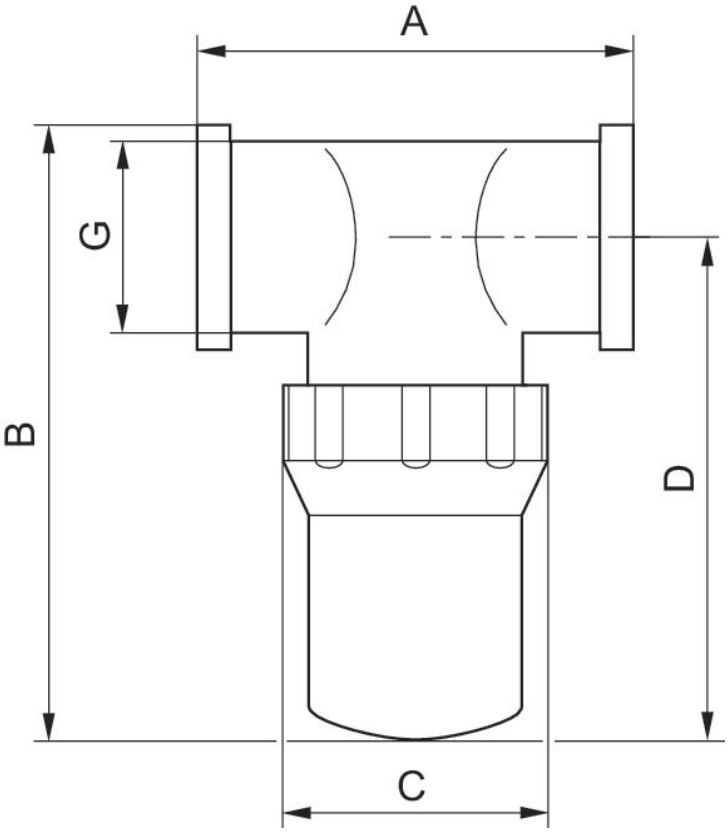

Part No.	Port G	G	A	B	C	D
0821305181	G 1/8	G 1/8	76	60	48	50

Part No.	Port G	G	A	B	C	D
0821305182	G 1/4	G 1/4	76	60	48	50
0821305183	G 3/8	G 3/8	76	102	48	88
0821305184	G 1/2	G 1/2	76	102	48	88
0821305185	G 3/4	G 3/4	90.5	136.5	74.2	118

characteristics (flow volume)

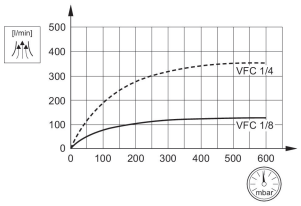

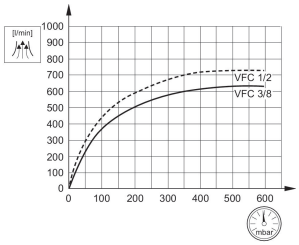

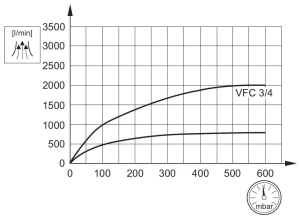

replacement filter, Series VFI

Min. ambient temperature: 0 °C
Max. ambient temperature: 50 °C

Type	Filter porosity [µm]	Filter insert	Part No.
VFI-6/4	50	Polypropylene, Polyamide	R412010114
VFI-8/6	50	Polypropylene, Polyamide	R412010115

Dimensions

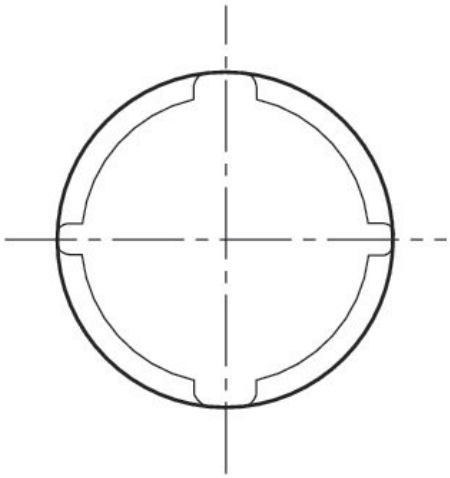

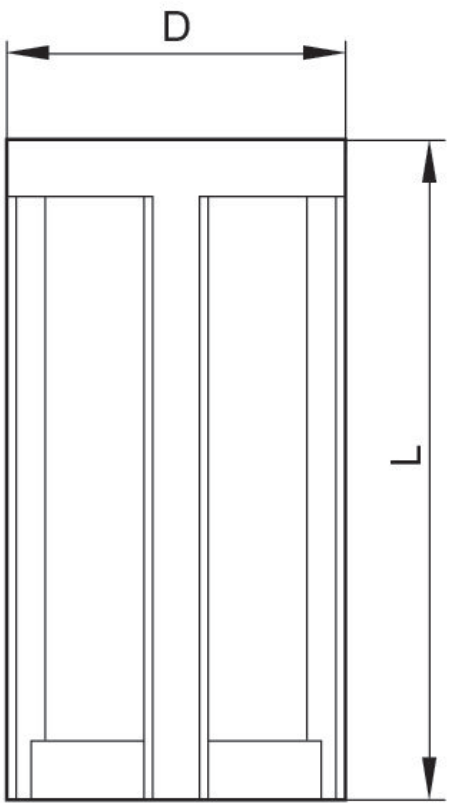

Part No.	Type	D	L
R412010114	VFI-6/4	10.4	20.5
R412010115	VFI-8/6	16.2	22.5

replacement filter, Series VFC

Min. ambient temperature: 5 °C
Max. ambient temperature: 52 °C

Type	Port	Filter porosity [µm]	Filter insert	Part No.
VFC-1/8, VFC-1/4	G 1/8	80	Polyethylene	1827010689
VFC-3/8, VFC-1/2	G 3/8	80	Polyethylene	1827010690
VFC-3/4	G 3/4	80	Polyethylene	1827010691

Dimensions

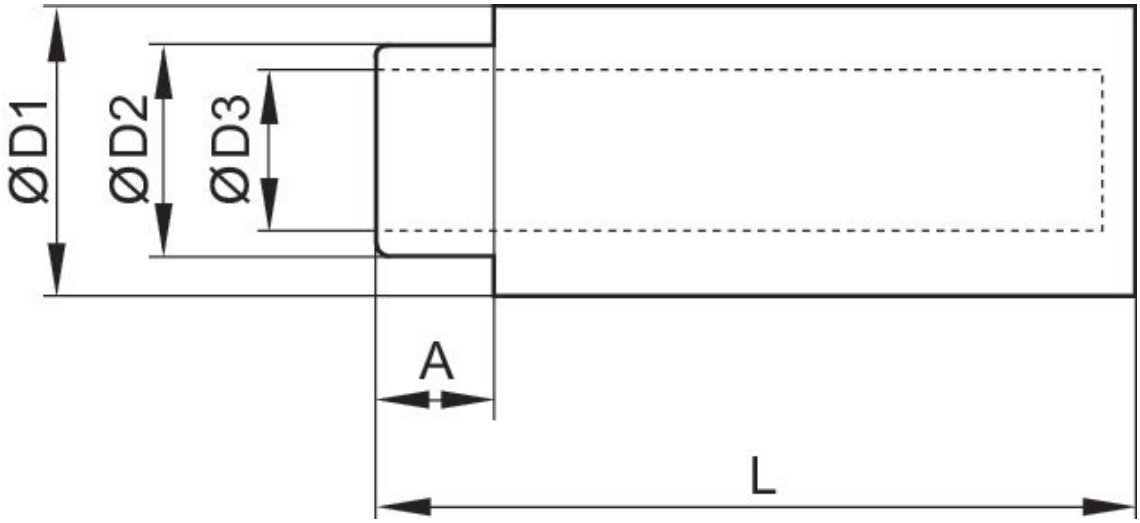

Part No.	Port G	Type	A	Ø D1	Ø D2	Ø D3	L
1827010689	G 1/8	VFC-1/8, VFC-1/4	11	25	19.5	15	37
1827010690	G 3/8	VFC-3/8, VFC-1/2	11	25	19.5	15	71
1827010691	G 3/4	VFC-3/4	10	39	33	27.5	88.5

Vacuum filter Inline, Series VFI

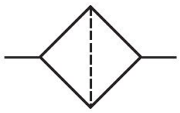

Port	Filter insert	Part No.
G 1/8	tin bronze	2737000180
G 1/4	tin bronze	2737000140
G 3/8	tin bronze	2737000380
G 1/2	tin bronze	2737000120

Dimensions

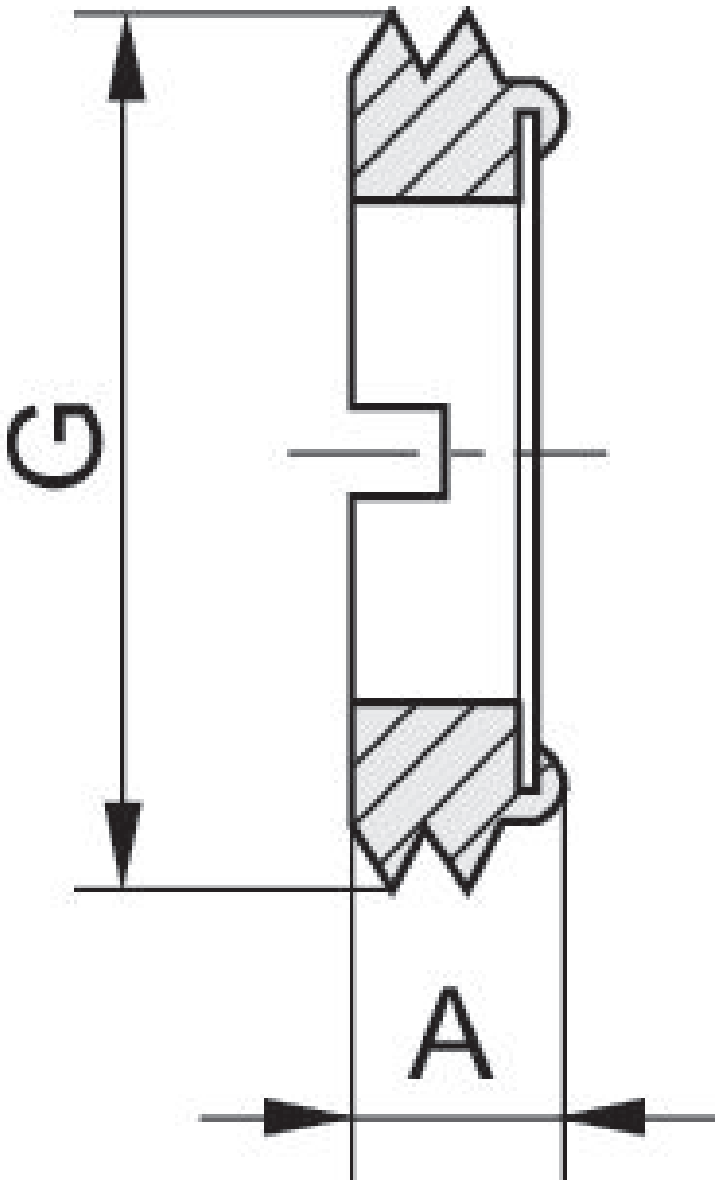

Part No.	Port G	A
2737000180	G 1/8	3.5
2737000140	G 1/4	5
2737000380	G 3/8	5
2737000120	G 1/2	5

Flow valve, Series VCK

Min. ambient temperature: 0 °C
Max. ambient temperature: 60 °C

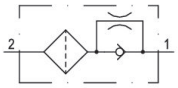

Compressed air connection 1	Compressed air connection 2	Housing material	Part No.
M5	M5	Aluminum	0821305043
G 1/8	G 1/8	Aluminum	0821305044
G 1/4	G 1/4	Aluminum	0821305045
G 3/8	G 3/8	Aluminum	0821305046
G 1/2	G 1/2	Aluminum	0821305047

Dimensions

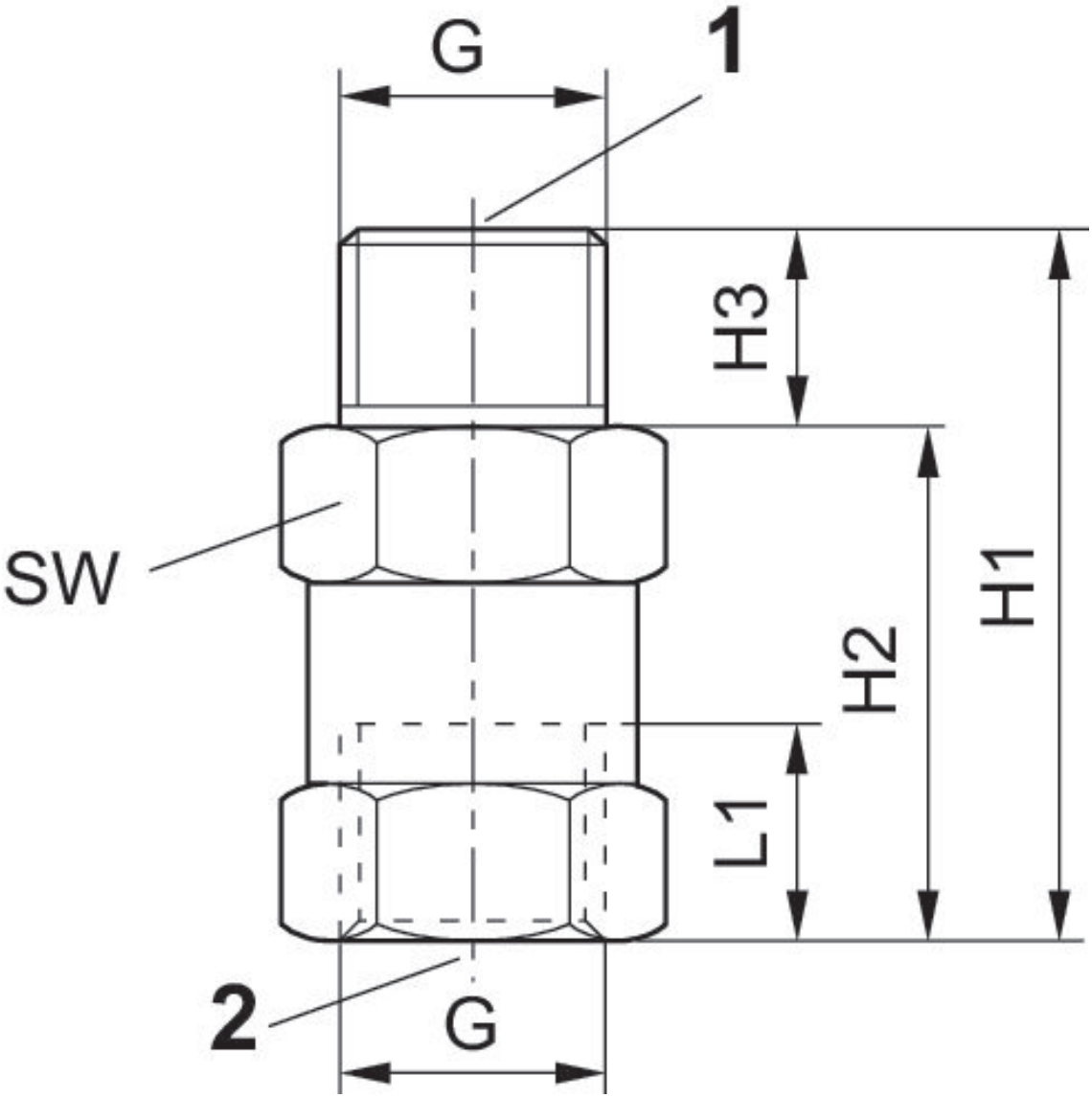

vacuum ejector connection 1, suction cup connection 2

Part No.	G	H1	H2	H3	L1	SW
0821305043	M5	20	15.5	4.5	4.5	8
0821305044	G 1/8	34	26	8	8.5	14
0821305045	G 1/4	36	26	10	11	17
0821305046	G 3/8	39	29	10	12	22
0821305047	G 1/2	41	29	12	14	27

Mounting bracket

For series: EMS

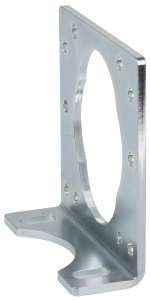

Delivery unit [piece]	Weight [kg]	Material	Part No.
1	0.106	Steel, chrome-plat-ed	R412026103

Dimensions

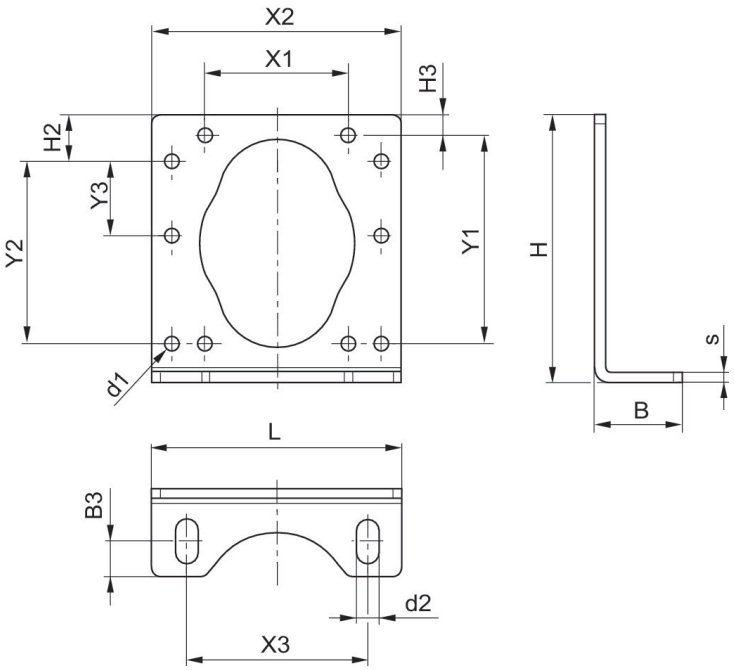

Angle joint, Series AJT

Bending moment [Nm]	Max. vertical load (static) [N]	Part No.
8	500	0821305168
10	750	0821305169
50	3000	0821305170

Dimensions

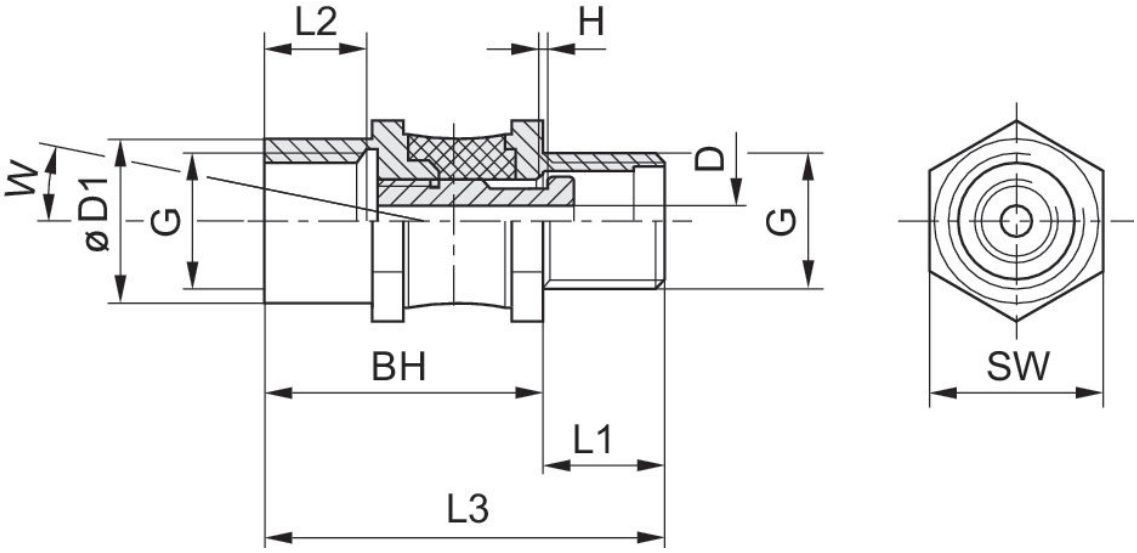

Part No.	G1	G	Ø D1	D	L1	L2	L3	BH	H
0821305168	G 1/4	M10x1,25	16	2.8	8	10.5	35	27	1.5
0821305169	G 1/4	G 1/4	16	3	12	12	39	27	1.5
0821305170	G 1/2	G 1/2	26	6	14	14	47.5	33.5	1.3

Part No.	SW	W
0821305168	17	12°
0821305169	17	12°
0821305170	27	12°

Reservoir, Series VFC

Type	Part No.
VFC-1/8, VFC-1/4	R961400171
VFC-3/8, VFC-1/2	R961400172
VFC-3/4	R961400173

Dimensions

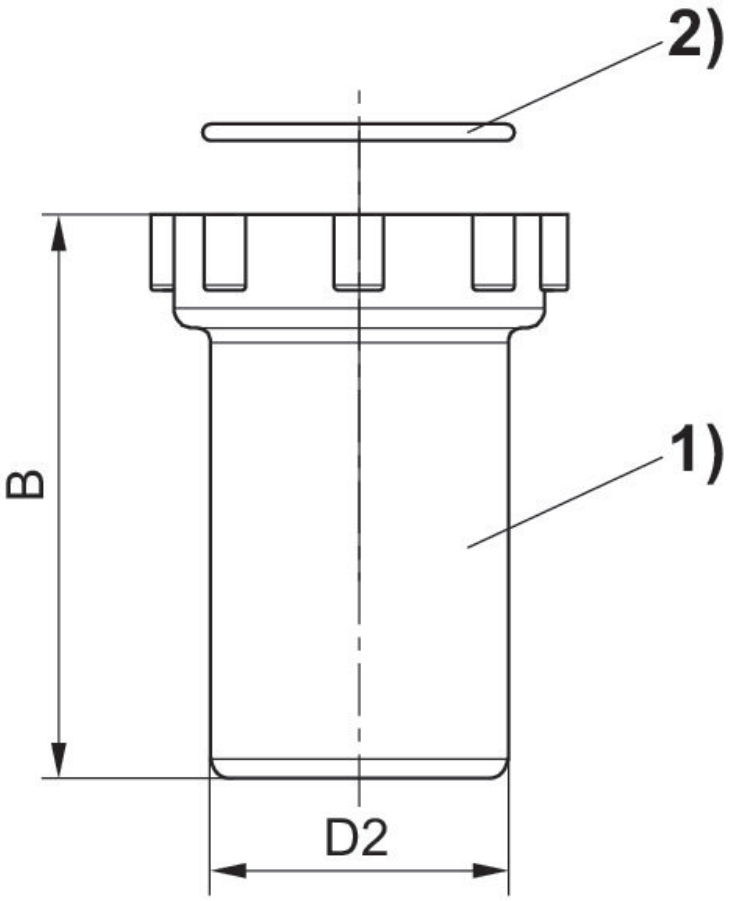

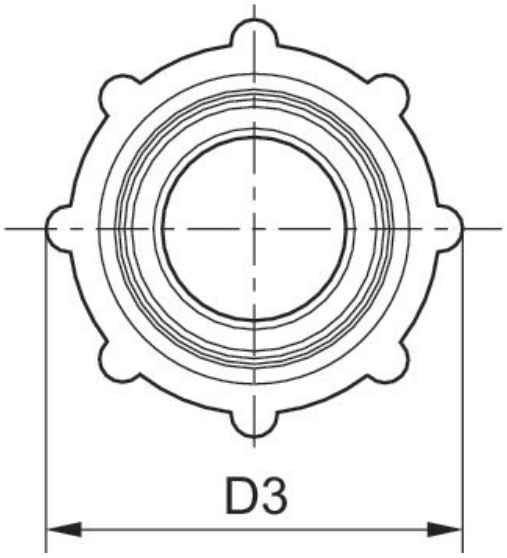

1) Reservoir
2) Seal

Part No.	Type	B	D2	D3
R961400171	VFC-1/8 VFC-1/4	33.7	37	48
R961400172	VFC-3/8 VFC-1/2	67.3	35.2	48
R961400173	VFC-3/4	91.4	55.1	74.2

Orifice plugs

For series: EMS

Delivery unit [piece]	Weight [kg]	Material	Part No.
1	0.014	Steel, chrome-plat-ed	R412026139

Dimensions

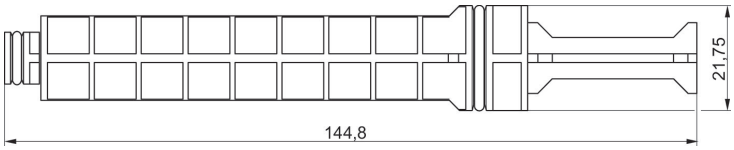

Spring-loaded plunger, Series PSL

Min. ambient temperature: 0 °C
Max. ambient temperature: 80 °C

Type	Max. spring force [N]	Bending moment [Nm]	Max. vertical load (static) [N]	Part No.
not non-rotating	2.98	0.7	550	0821305171
not non-rotating	4.36	2.2	1500	0821305172

Dimensions

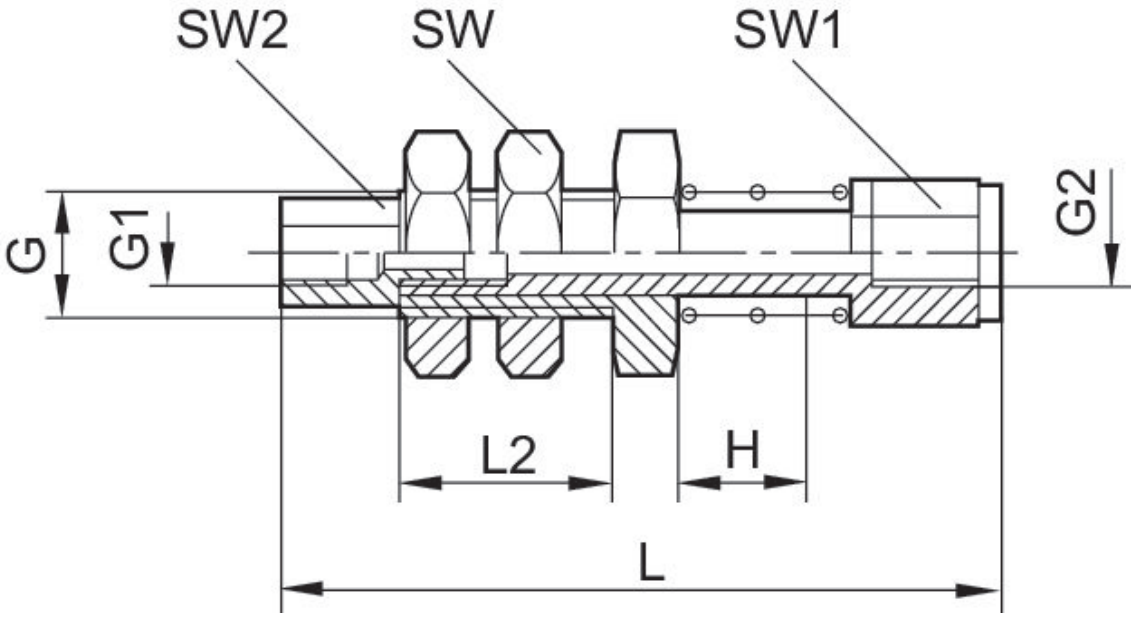

H = stroke

Part No.	G	G1	G2	H	L	L2	SW	SW1	SW2
0821305171	M6x0,75	M3	M3	5	33.5	10	10	7	4.5
0821305172	G 1/8	M5	M5	10	47.2	15	14	7	7

Spring-loaded plunger, Series PSL

Min. ambient temperature: 0 °C
Max. ambient temperature: 80 °C

Type	Max. spring force [N]	Bending moment [Nm]	Max. vertical load (static) [N]	Part No.
not non-rotat-ing	5.19	13.9	3700	0821305173
not non-rotat-ing	5.36	13.9	3700	0821305174
not non-rotat-ing	5.34	13.9	3700	0821305175
not non-rotat-ing	15.36	36.6	2400	0821305176
not non-rotat-ing	12.7	36.6	2400	0821305177
not non-rotat-ing	15.2	36.6	2400	0821305178
not non-rotat-ing	73.5	99.1	4900	0821305179
not non-rotat-ing	77.4	99.1	4900	0821305180

Dimensions

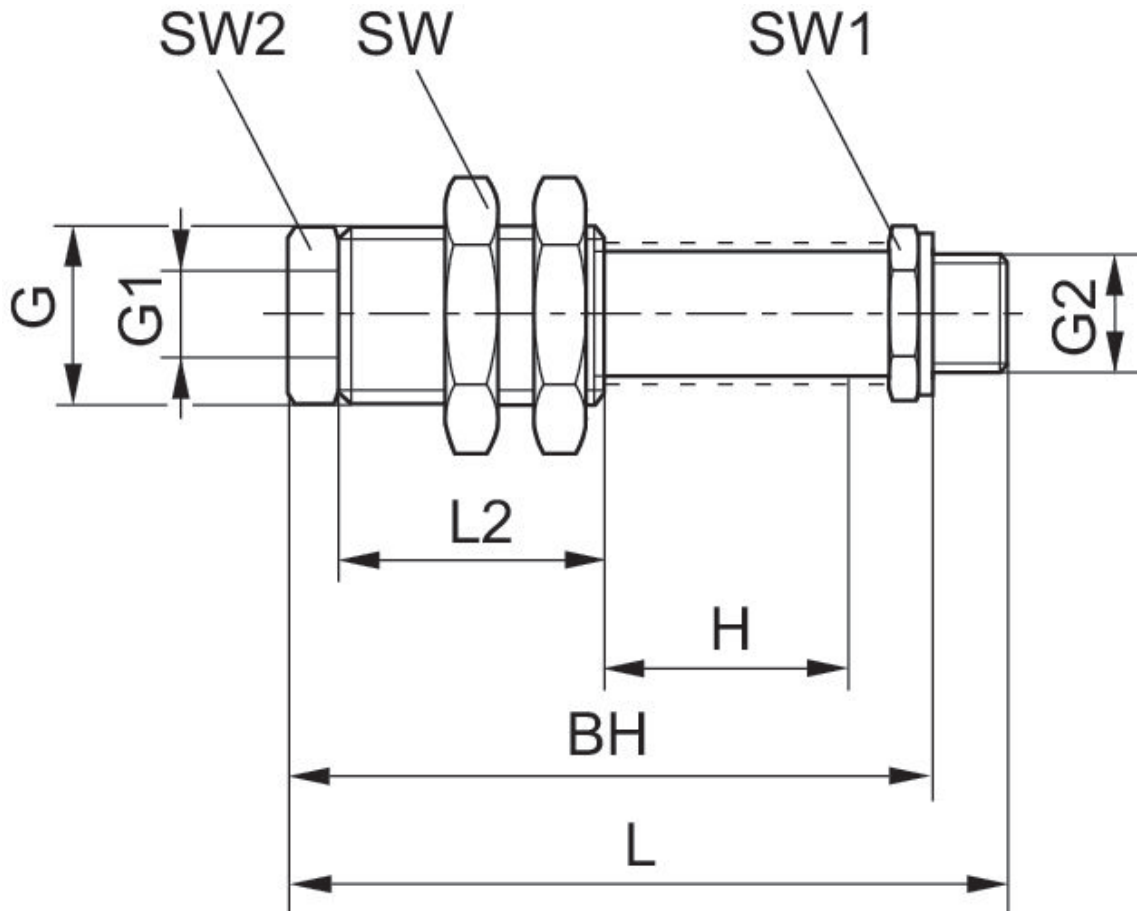

H = stroke

Part No.	G	G1	G2	H	L	L2	SW	SW1	SW2
0821305173	M16x1	G 1/8	G 1/8	15	80	30	22	14	12
0821305174	M16x1	G 1/8	G 1/8	25	93	30	22	14	12
0821305175	M16x1	G 1/8	G 1/8	50	124	30	22	14	12
0821305176	M20x1,5	G 1/8	G 1/4	25	94.5	40	24	17	17
0821305177	M20x1,5	G 1/8	G 1/4	50	124	40	24	17	17
0821305178	M20x1,5	G 1/8	G 1/4	75	153.5	40	24	17	17
0821305179	M30x1,5	G 3/8	G 1/2	25	116	55	36	24	24
0821305180	M30x1,5	G 3/8	G 1/2	75	187	55	36	24	24

Part No.	BH
0821305173	73.5
0821305174	86.5
0821305175	117.5
0821305176	86
0821305177	115.5
0821305178	145
0821305179	105.3

Part No.	BH
0821305180	176.5

Efficient pneumatic solutions, our program: cylinders and drives, valves and valve systems, air supply management, proportional pressure control valves

Visit us: **www.Emerson.com/aventics**
Your local contact: **Emerson.com/contactus**

Emerson.com
Facebook.com/EmersonAutomationSolutions
LinkedIn.com/company/Emerson-Automation-Solutions
Twitter.com/EMR_Automation

The Emerson logo is a trademark and service mark of Emerson Electric Co. AVENTICS is a registered trademark of one of the Emerson family of companies. All other trademarks are the property of their respective owners. © 2020 Emerson Electric Co. All rights reserved.

EMERSON.

CONSIDER IT SOLVED™