series NCT

AVENTICS™

AVENTICS Series NCT Non-contact transport system

EMERSON™

series NCT

AVENTICS Series NCT non-contact transport systems make for a unique gripping experience: The floating suction pads in the NCT Series are masterful in sensitively handling delicate surfaces and difficult-to-grasp materials in a virtually non-contact and extremely gentle process. Handling with NCT is even possible with a large degree of perforation, contaminated, wet, and dusty surfaces, or soft materials.

- Virtually no contact required to lift and move objects and workpieces up to a weight of 1 kg

Product overview

Page

Non-contact transport system, Series NCT-AL

Compressed air connection type: Internal thread
Min. ambient temperature: 5 °C
Max. ambient temperature: 60 °C
Min. working pressure: 1 bar
Max. working pressure: 6 bar

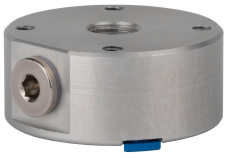

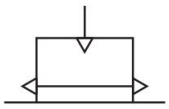

Compressed air con-nection	Lifting force at [[5] bar] [N]	Diameter [mm]	Material	Part No.
M5	2.5	20	Aluminum	R412010372
M5	4	30	Aluminum	R412010373
G 1/8	6.5	40	Aluminum	R412010374
G 1/8	13	60	Aluminum	R412010375
G 1/8	46	100	Aluminum	R412010640

Dimensions

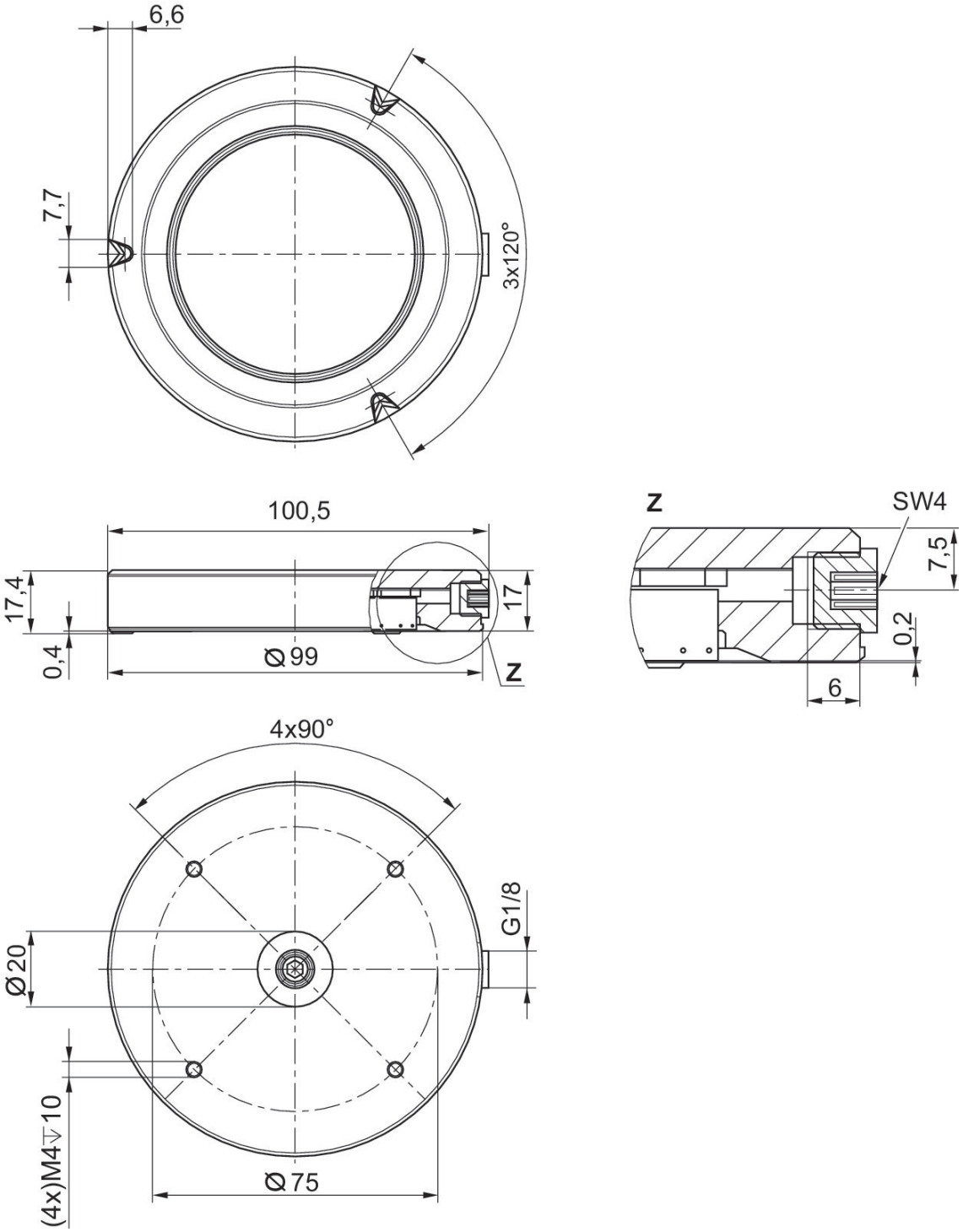
6,6
7,7
3x120°
100,5
17,4
0,4
17
Ø99
Z
Z
SW4
7,5
0,2
6
4x90°
G1/8
Ø20
(4x)M4↧10
Ø75

Principle of operation

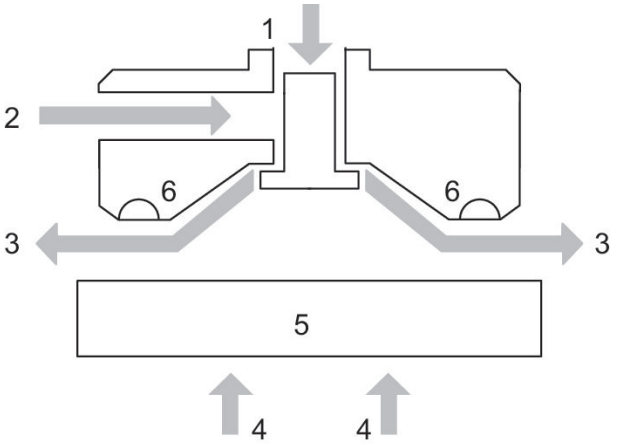

1) Compressed air connection 2) Alternative compressed air connection 3) Air flow 4) Lifting force 5) Object 6) Stop

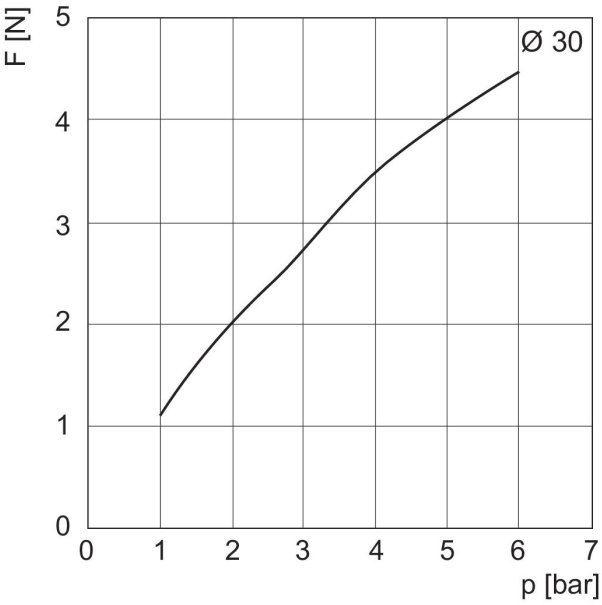

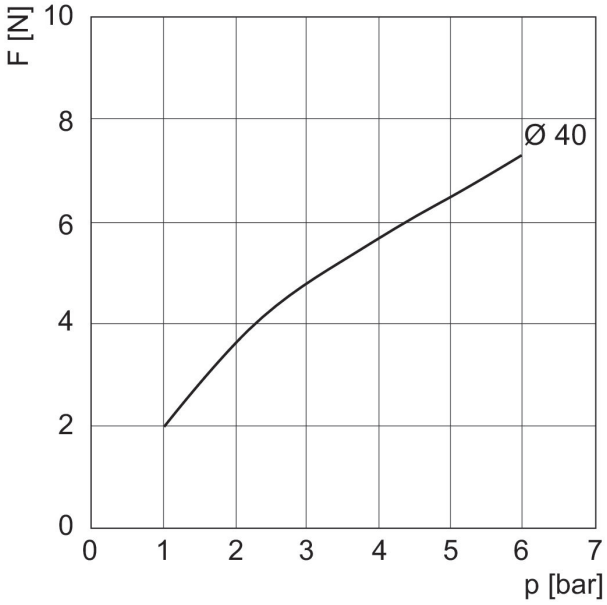

Air consumption Q depending on working pressure p

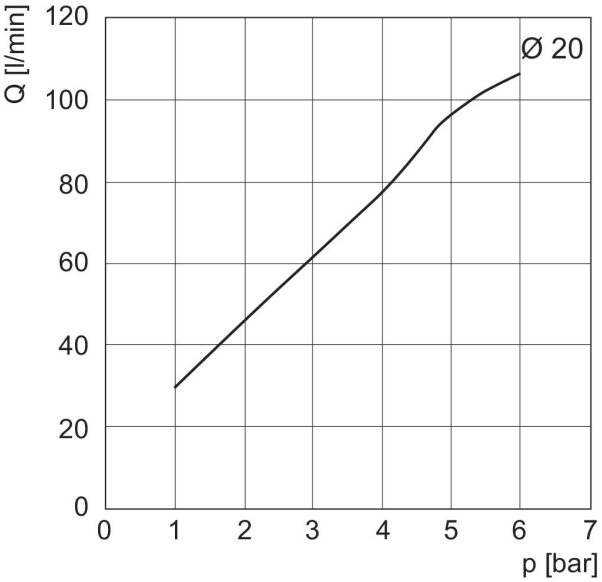

Lifting force F dependent on working pressure p

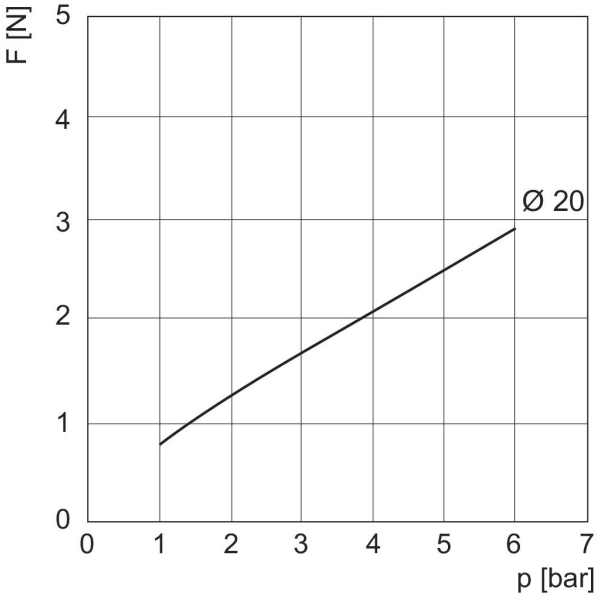

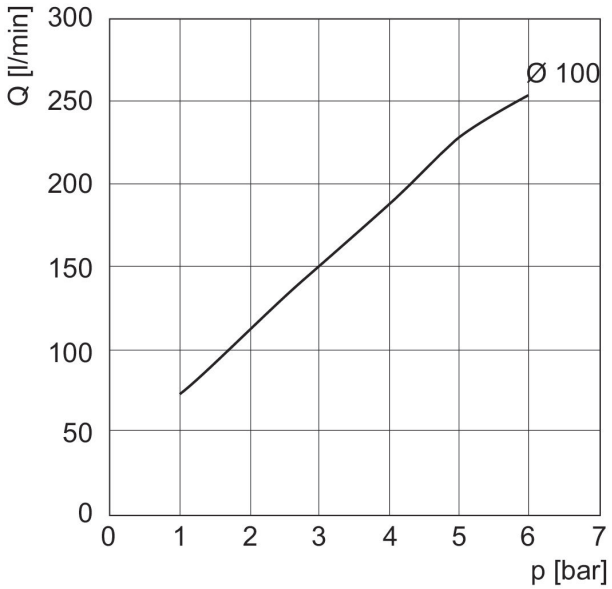

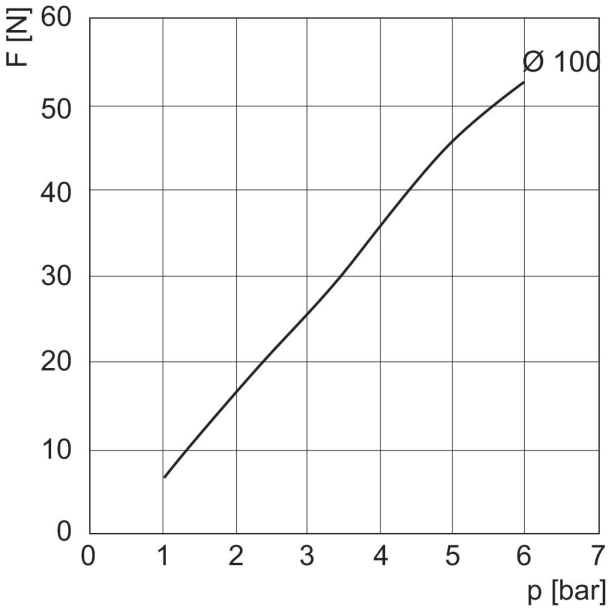

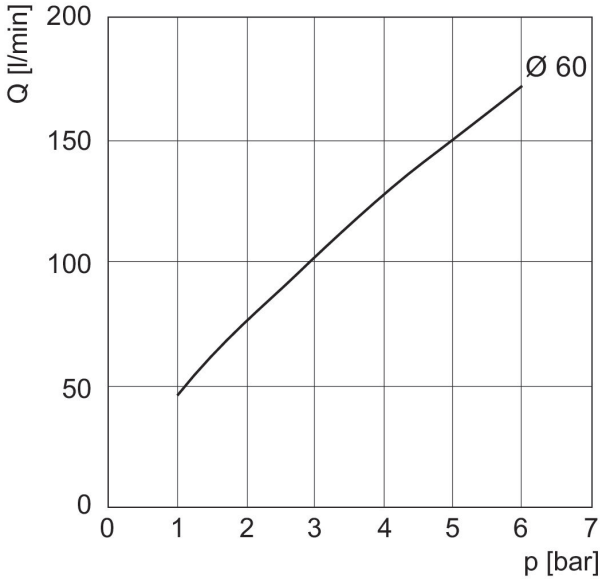

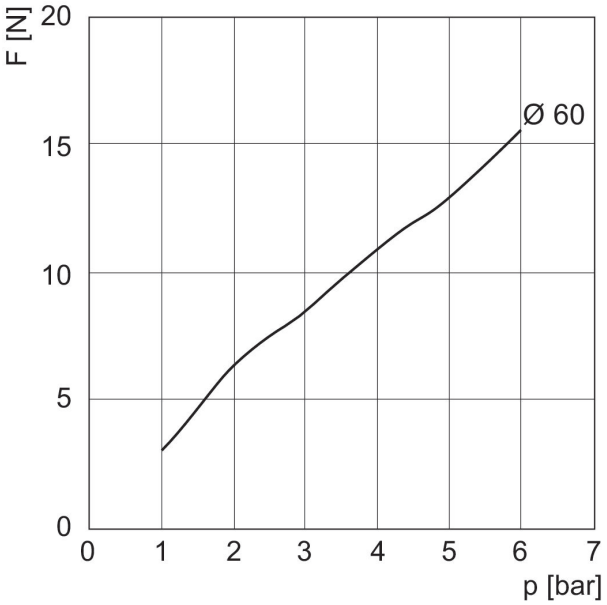
F [N]
20
15
10
5
0
0
1
2
3
4
5
6
7
p [bar]
Ø 60

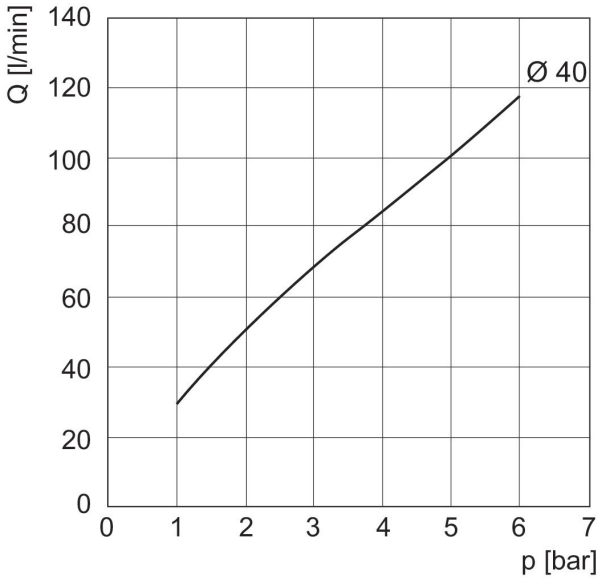
Q [l/min]
140
120
100
80
60
40
20
0
0
1
2
3
4
5
6
7
p [bar]
Ø 40

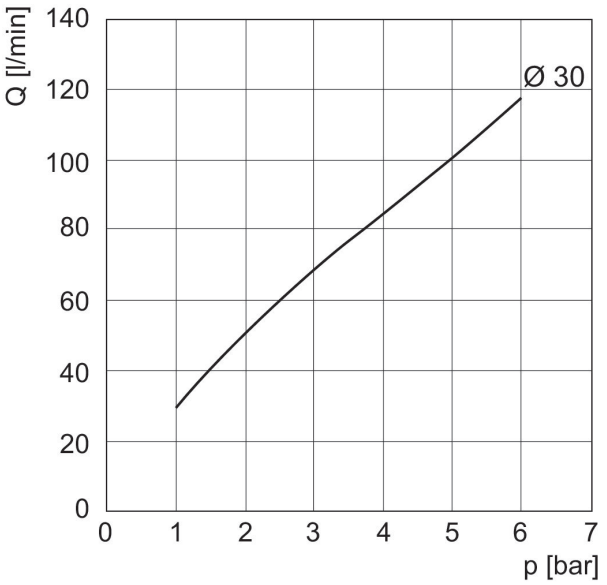
Q [l/min]
140
120
100
80
60
40
20
0
0
1
2
3
4
5
6
7
p [bar]
Ø 30

Non-contact transport system, Series NCT-PK

Compressed air connection type: Internal thread
suitable for use in food processing: suitable for use in food processing
Certificates: FDA conform
Min. ambient temperature: 5 °C
Max. ambient temperature: 60 °C
Min. working pressure: 1 bar
Max. working pressure: 7 bar

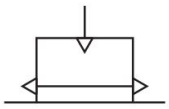

Compressed air connection	Lifting force at [[5] bar] [N]	Diameter [mm]	Material	Part No.
M5	2.5	20	Polyetheretherketone	R412014866
M5	3	30	Polyetheretherketone	R412014867
M5	5.5	40	Polyetheretherketone	R412014868
M5	12	60	Polyetheretherketone	R412014869

Dimensions

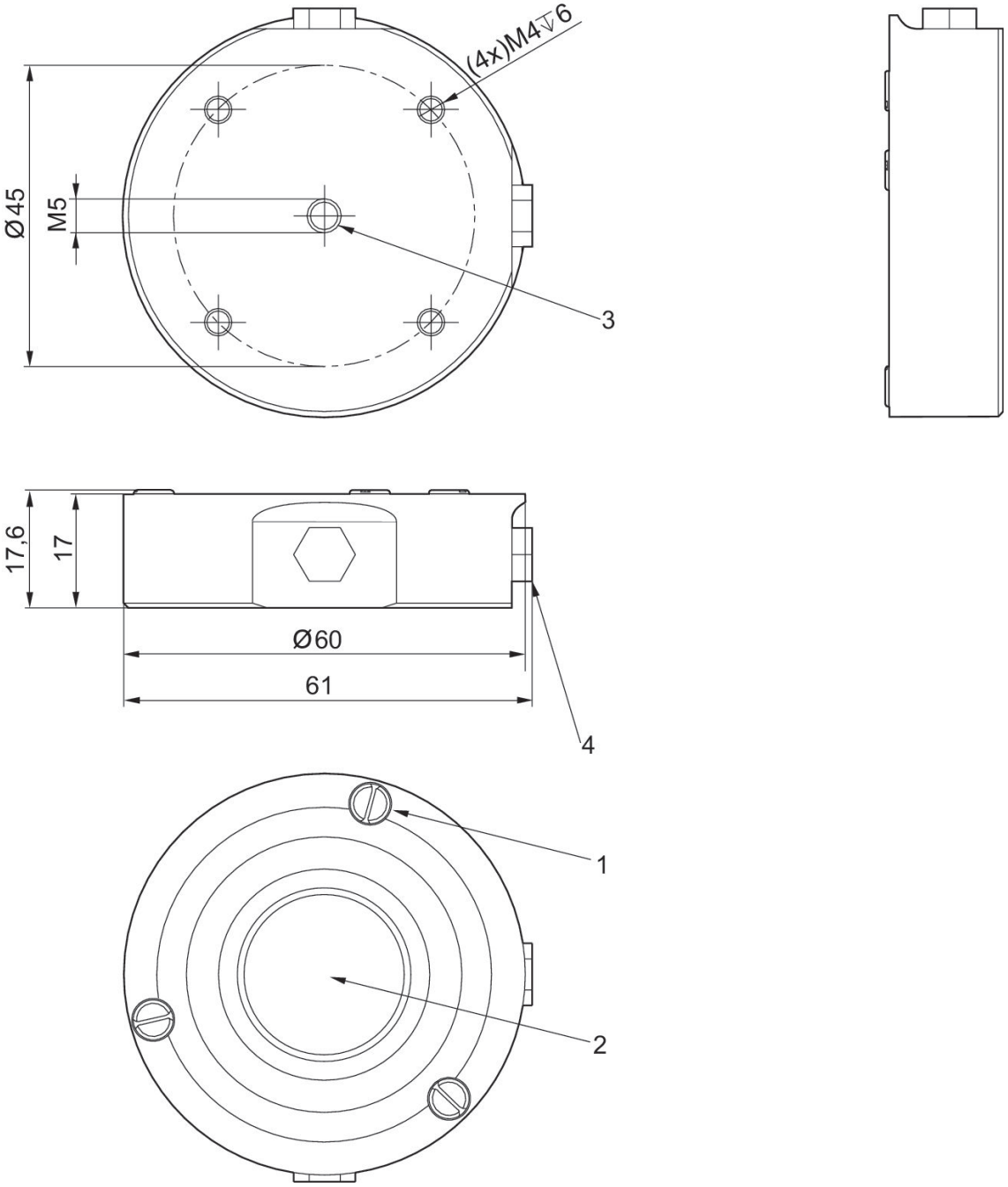

1) Stop 2) Nozzle 3) Compressed air connection 4) Alternative compressed air connection with blanking screw

Principle of operation

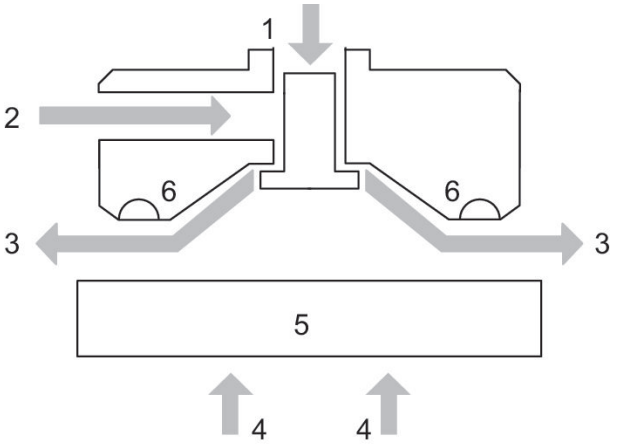

1) Compressed air connection 2) Alternative compressed air connection 3) Air flow 4) Lifting force 5) Object 6) Stop

Lifting force F and air consumption Q depending on working pressure p

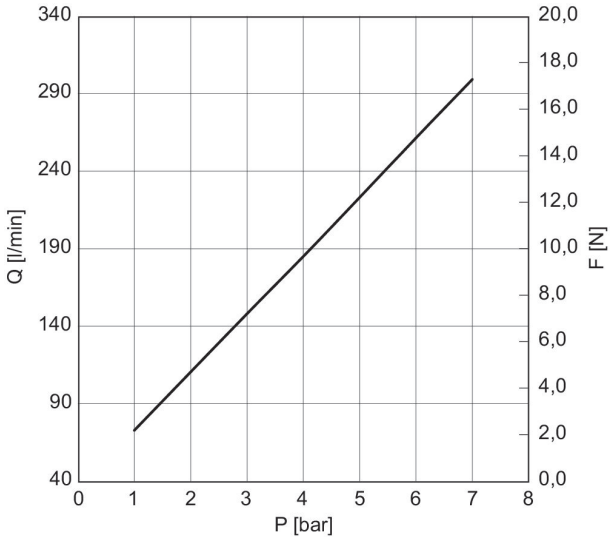

Lifting force F and air consumption Q depending on working pressure p

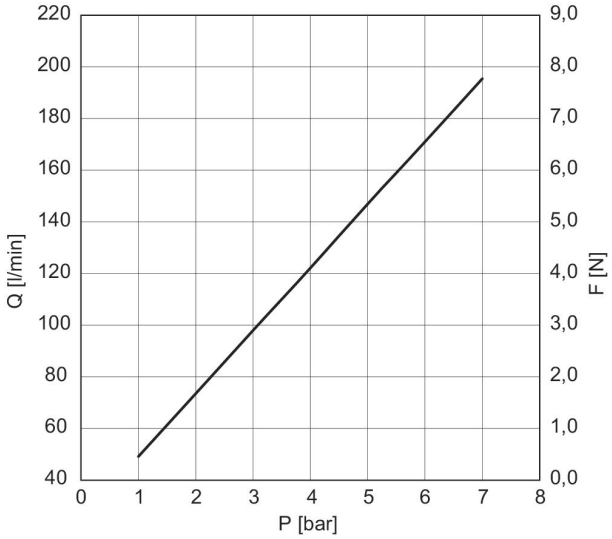

Lifting force F and air consumption Q depending on working pressure p

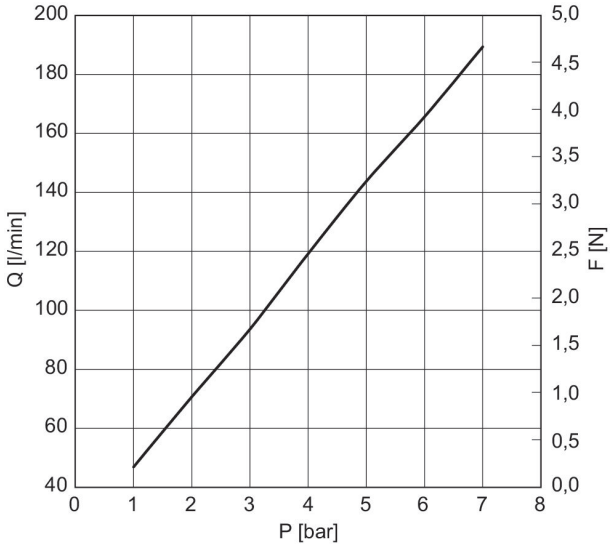

Lifting force F and air consumption Q depending on working pressure p

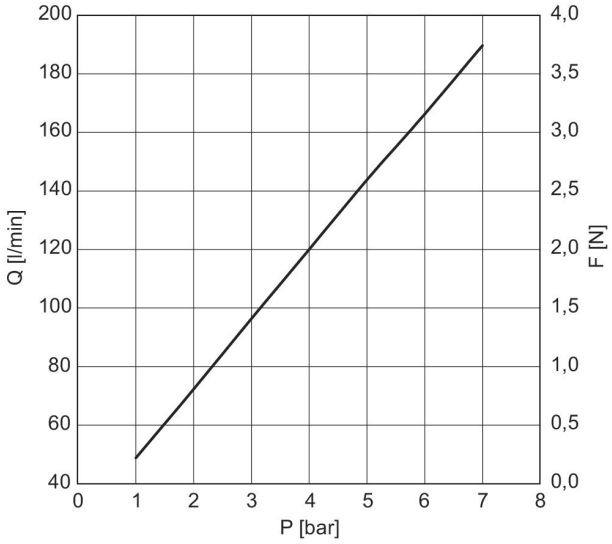

Stops for the NCT-AL series

Type	Scope of delivery [piece]	Part No.
NCT-AL Ø20/30	10	R412010376

Dimensions

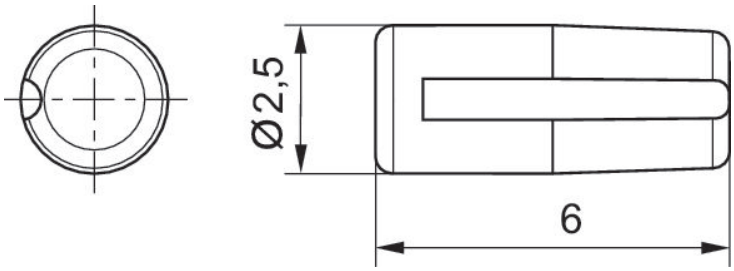

Stops for the NCT-AL series

Type	Scope of delivery [piece]	Part No.
NCT-AL Ø40/60/100	10	R412010377

Dimensions

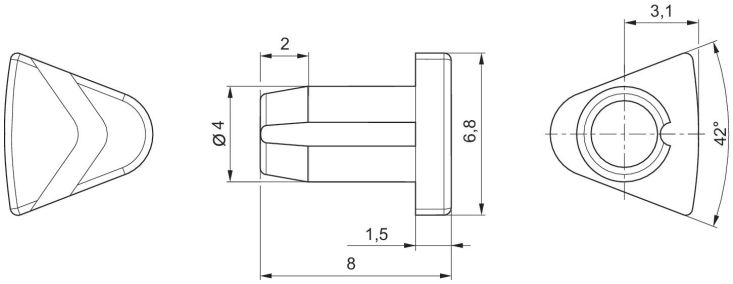

Stops for the NCT-PK series

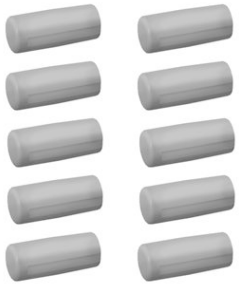

Type	Scope of delivery [piece]	Part No.
NCT-PK Ø20	10	R412014872

Dimensions

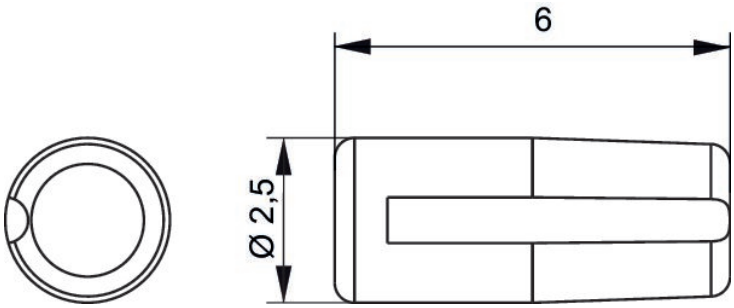

Stops for the NCT-PK series

Type	Scope of delivery [piece]	Part No.
NCT-PK Ø30, NCT-PK Ø40, NCT-PK Ø60	10	R412014873

Dimensions

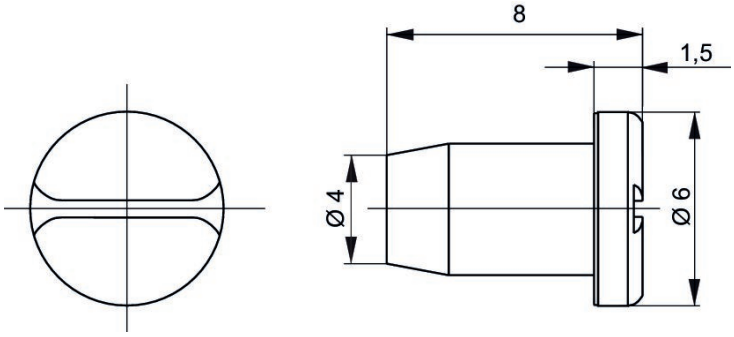

Stops for the NCT-PK series

Type	Scope of delivery [piece]	Part No.
NCT-PK Ø20	10	R412014876

Dimensions

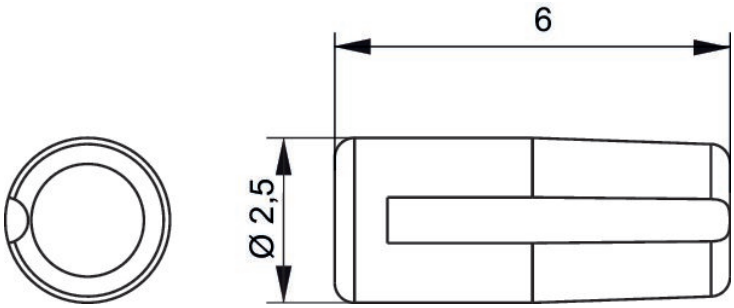

Stops for the NCT-PK series

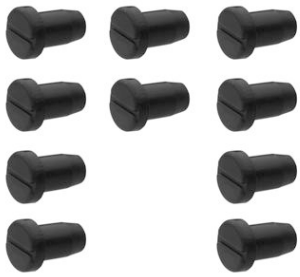

Type	Scope of delivery [piece]	Part No.
NCT-PK Ø30, NCT-PK Ø40, NCT-PK Ø60	10	R412014877

Dimensions

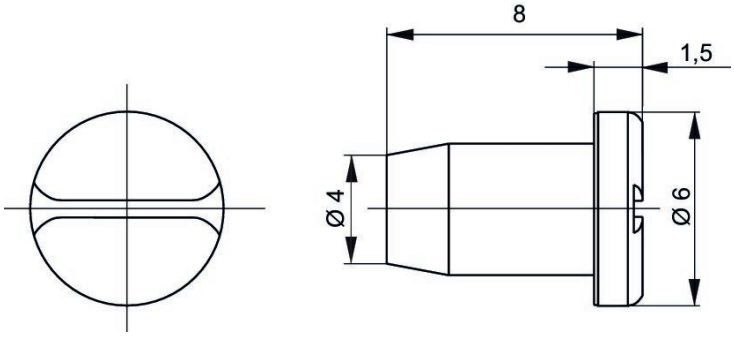

Efficient pneumatic solutions, our program: cylinders and drives, valves and valve systems, air supply management, proportional pressure control valves

Visit us: **www.Emerson.com/aventics**
Your local contact: **Emerson.com/contactus**

Emerson.com
Facebook.com/EmersonAutomationSolutions
LinkedIn.com/company/Emerson-Automation-Solutions
Twitter.com/EMR_Automation

The Emerson logo is a trademark and service mark of Emerson Electric Co. AVENTICS is a registered trademark of one of the Emerson family of companies. All other trademarks are the property of their respective owners. © 2020 Emerson Electric Co. All rights reserved.

EMERSON.

CONSIDER IT SOLVED™