Valve plug connector, series CON-VP, 0° female insert

1834484210

Series
CON-VP
with cable

2026-09-15

AVENTICS Series CON-VP Valve plug connectors with cable

The AVENTICS Series CON-VP-with cable offers valve plug connectors with cables of various length, used to connect various valve Series and sensors. The Series covers connector types of Form A, B, B Industry, C and C Industry complying with standards EN 175301-803 (Form A), ISO 6952 (Form B) and ISO 15217 (Form C)

- Valve plug connector with connected cable
- Form A EN 175301-803
- Form B ISO 6952 and B industry
- Form C ISO 15217 and C industry
- With/without protective circuit/LED

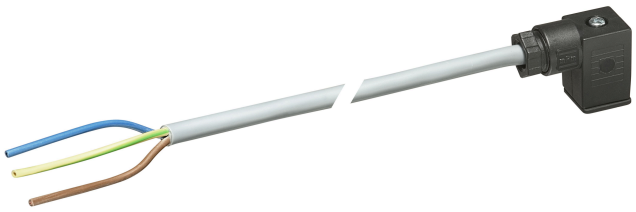

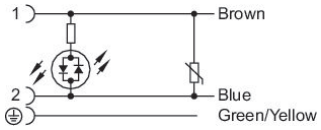

Technical data

Industry	Industrial
Type	Valve plugs
Cable	with cable
Operational voltage	230 V AC/DC
Electrical connection 1, type	Socket
Electrical connection 1, thread size	form C
Electrical connection 1, number of poles	2+E
Cable exit 1	angled
Cable exit angle	90°
Electrical connection 2, type	open cable ends
Electrical connection 2, number of poles	3-pin
Contact assignment	2+E
Number of wires	3
Shielding	unshielded
Cable length L	5 m
Protection class	IP67
Protective circuit	Varistor
Min. ambient temperature	-20 °C
Max. ambient temperature	80 °C

Valve plug connector, series CON-VP, 0° female insert

1834484210

Max. current	6 A
with LED	Yellow
Wire cross-section	0.75 mm²
Cable-Ø	5.9 mm
Mounting screw tightening torque	0.4 Nm
Weight	0.297 kg

Material

Seal material	Thermoplastic polyurethane (TPU)
Material cable sheath	Polyvinyl chloride
Part No.	1834484210

Technical information

The specified protection class is only valid in assembled and tested state.

Valve plug connector, series CON-VP, 0° female insert

1834484210

Dimensions

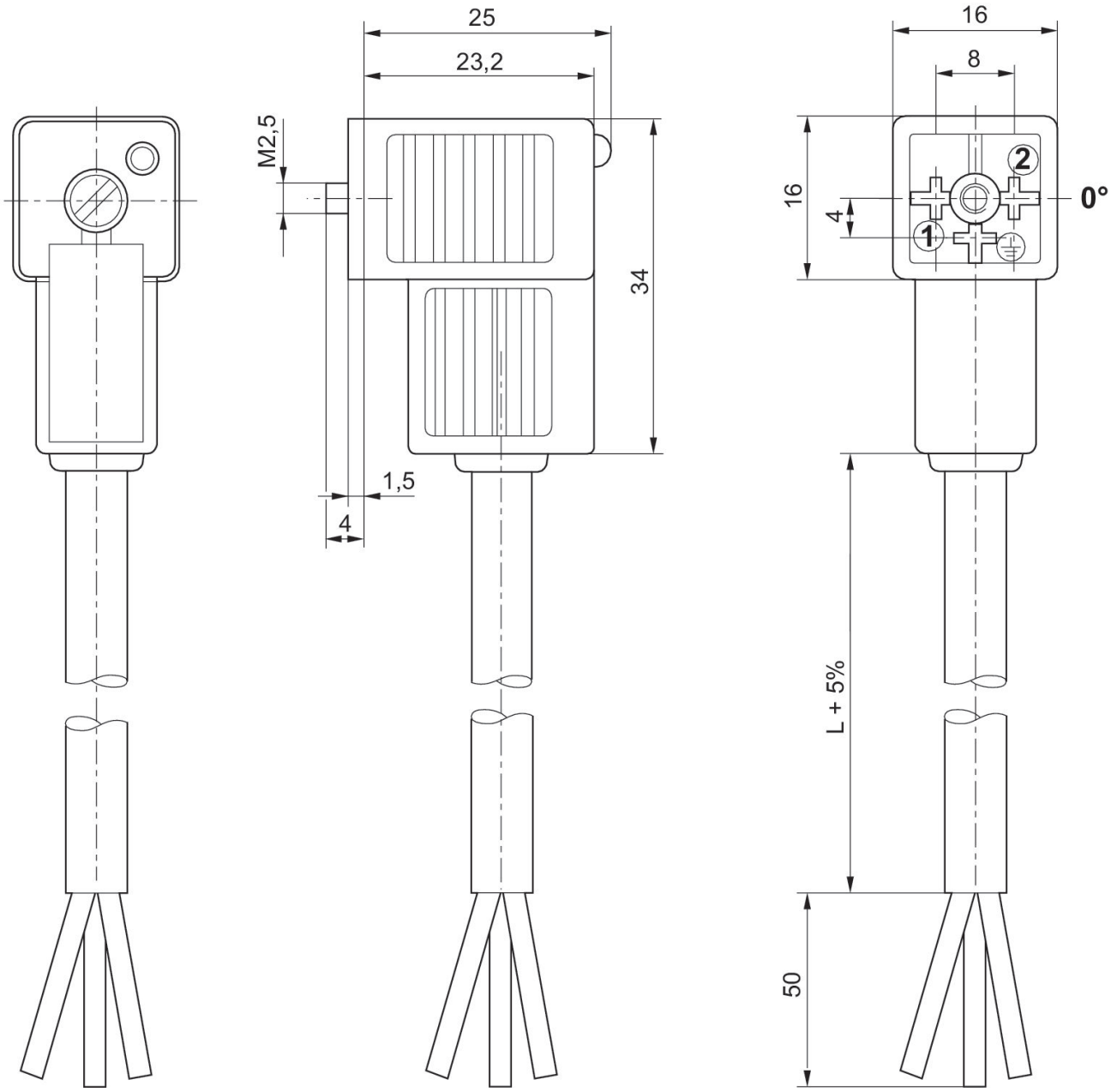

0° female insert