# Pressure gauge, Series PG1-SNL

**1827231032**



## Series PG1 Pressure gauges

With the AVENTICS Series PG1 you can visualize and rely on a clear air pressure display for each of your pneumatic circuits. In addition to the parameters for controlling the air quality, supplying sufficient pressure is the basis for operating a reliable system within machine automation. Emerson offers mechanical pressure gauges that can be integrated into machines for diverse applications and air preparation systems. The specifications of the individual versions in the universal PG1 Series provide a selection of options, such as appearance, material, or the required type of mounting.

- Clearly visible pressure indicators in different sizes and versions
- Gauges available with or without adjustable work area display
- Special gauges available like glycerine filled gauges or stainless-steel housing






## Technical data

| | |
|---|---|
| Industry | Industrial |
| Pressure gauge version | Bourdon tube pressure gauge<br>For panel installation<br>with U-clip |
| Standardization | EN 837-1 |
| Class | 1,6 |
| Compressed air connection | G 1/4 |
| Nominal diameter | 50 mm |
| Scale value | 0.1 |
| Min. range of application | 0 bar |
| Max. range of application | 2 bar |
| Min. display range | 0 bar |
| Max. display range | 2.5 bar |
| Min. working pressure | 0 bar |
| Max. working pressure | 2.5 bar |
| Min. ambient temperature | -20 °C |
| Max. ambient temperature | 60 °C |
| Medium | Compressed air |
| Background color | Black |
| Main scale unit (outside) | bar |

| | |
|---|---|
| Main scale color (outside) | Green |
| Secondary scale unit (inside) | psi |
| Secondary scale color (inside) | White |
| Pointer color | White |
| Weight | 0.148 kg |

## Material

| | |
|---|---|
| Housing material | Steel, chrome-plated |
| Material viewing window | Polystyrene |
| Material thread | Brass |
| Material front ring | Steel, chrome-plated |
| | 1827231032 |

## Technical information

Order axial seal separately

## Dimensions

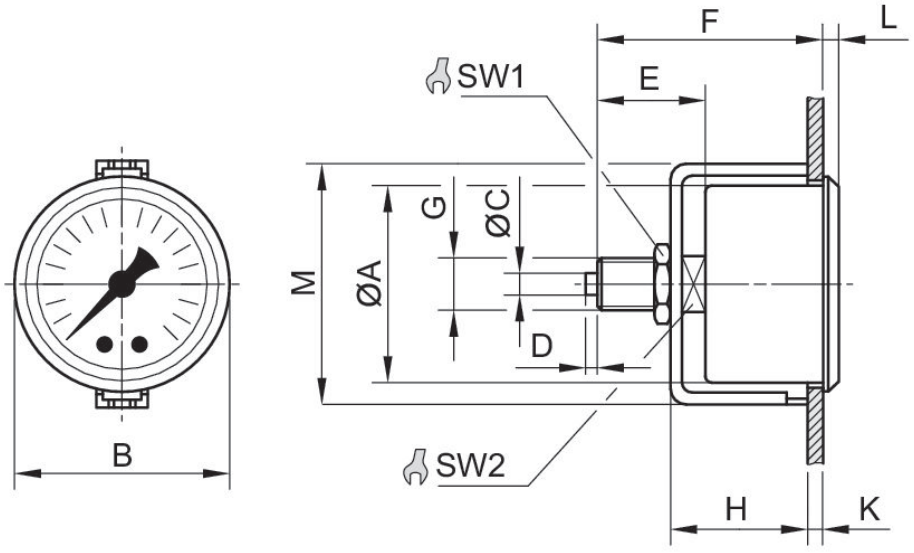

## Dimensions in mm

| Part No. | Compressed air connection | Nominal diameter | Ø A | B | C | D | E | F | H | K |
|---|---|---|---|---|---|---|---|---|---|---|
| 1827231042 | G 1/8 | 40 mm | 40 | 43 | – | – | 25.5 | 49 | 32 | 4 |
| **1827231032** | G 1/4 | 50 mm | 50 | 54 | 5 | 3 | 29.5 | 51.5 | 34.5 | 3 |
| 1827231036 | G 1/4 | 63 mm | 62 | 67 | 5 | 3 | 27 | 53 | 36.3 | 4.2 |

| Part No. | L | M | SW1 | SW2 |
|---|---|---|---|---|
| 1827231042 | 4 | 49 | 17 | 14 |
| **1827231032** | 4.5 | 61 | 17 | 14 |
| 1827231036 | 5.5 | 75 | 17 | 14 |