# Flanschbefestigung, Serie MF1, MF2

**1827005931**

**AVENTICS Flanschbefestigungen**



## Technische Daten

| | |
|---|---|
| Branche | Industrie |
| geeigneter Kolbendurchmesser | 80 mm |
| Gelenklager-Ø | 30 mm |

## Werkstoff

| | |
|---|---|
| Werkstoff Gehäuse | Stahl, verchromt |
| Oberfläche Gehäuse | verzinkt |
| Materialnummer | 1827005931 |

## Abmessungen

# Flanschbefestigung, Serie MF1, MF2

1827005931

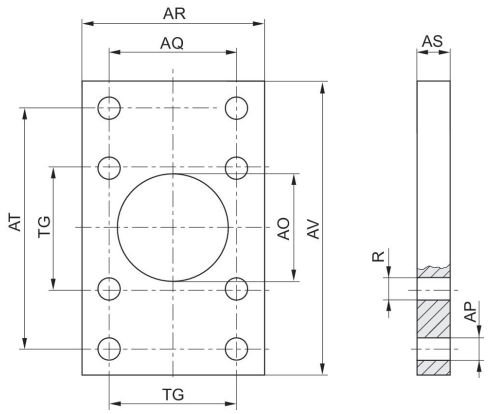


| Kolben-Ø | Material-nummer | AO H11 | AP H13 | AQ JS14 | AR | AS | AT JS14 | AV | R |
|---|---|---|---|---|---|---|---|---|---|
| 25 | 1827005926 | 25 | 9 | 28 | 40 | 8 | 68 | 80 | 7 |
| 32 | 1827005927 | 25 | 9 | 33 | 45 | 8 | 68 | 80 | 7 |
| 40 | 1827005928 | 32 | 9 | 40 | 52 | 8 | 78 | 90 | 7 |
| 50 | 1827005929 | 32 | 11 | 49 | 65 | 10 | 94 | 110 | 9 |
| 63 | 1827005930 | 45 | 11 | 59 | 75 | 10 | 104 | 120 | 9 |
| 80 | 1827005931 | 45 | 14 | 75 | 95 | 12 | 130 | 150 | 11 |
| 100 | 1827005932 | 55 | 14 | 90 | 115 | 12 | 150 | 170 | 11 |
| 125 | 1827005933 | 55 | 18 | 110 | 140 | 16 | 180 | 205 | 14 |
| 160 | 7472ZZ1408 | 65 | 22 | 140 | 180 | 20 | 228 | 260 | 18 |
| 200 | 7472ZZ1409 | 65 | 22 | 175 | 220 | 20 | 268 | 300 | 18 |

| Kolben-Ø | TG |
|---|---|
| 25 | 28 |
| 32 | 33 |
| 40 | 40 |
| 50 | 49 |
| 63 | 59 |
| 80 | 75 |
| 100 | 90 |
| 125 | 110 |
| 160 | 140 |
| 200 | 175 |