# Fußbefestigung, Serie MS1

**1827005878**

## AVENTICS Fußverbindungen



## Technische Daten

| | |
|---|---|
| Branche | Industrie |
| Version | schmale Ausführung |
| Normierung | CNOMO / NFE 49-001 |
| geeigneter Kolbendurchmesser | 25 mm |

## Werkstoff

| | |
|---|---|
| Werkstoff | Aluminium |
| Oberfläche | kathodisch tauchlackiert |
| Materialnummer | 1827005878 |

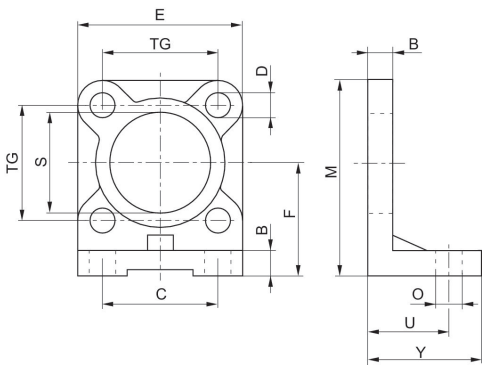

# Fußbefestigung, Serie MS1

1827005878

| Kolben-Ø | Material-nummer | B | C | D | E | F | M | O | S |
|---|---|---|---|---|---|---|---|---|---|
| 25 | 1827005878 | 8 | 24 | 7 | 40 | 30 | 50 | 9 | 25 |
| 32 | 1827005879 | 8 | 28 | 7 | 45 | 32 | 54 | 9 | 25 |
| 40 | 1827005880 | 8 | 36 | 7 | 52 | 36 | 62 | 9 | 32 |
| 50 | 1827005881 | 10 | 45 | 9 | 65 | 45 | 77 | 11 | 32 |
| 63 | 1827005882 | 10 | 55 | 9 | 75 | 50 | 87 | 11 | 45 |
| 80 | 1827005883 | 12 | 70 | 11 | 95 | 63 | 110 | 14 | 45 |
| 100 | 1827005884 | 12 | 90 | 11 | 115 | 73 | 130 | 14 | 55 |
| 125 | 1827005885 | 16 | 110 | 14 | 140 | 91 | 161 | 18 | 55 |
| 160 | 7472ZZ1418 | 20 | 130 | 18 | 180 | 115 | 205 | 22 | 65 |
| 200 | 7472ZZ1419 | 20 | 170 | 18 | 220 | 135 | 245 | 22 | 65 |

| Kolben-Ø | TG | U | Y |
|---|---|---|---|
| 25 | 28 | 27 | 35 |
| 32 | 33 | 27 | 35 |
| 40 | 40 | 27 | 35 |
| 50 | 49 | 35 | 45 |
| 63 | 59 | 35 | 45 |
| 80 | 75 | 43 | 55 |
| 100 | 90 | 43 | 55 |
| 125 | 110 | 52 | 68 |
| 160 | 140 | 62 | 82 |
| 200 | 175 | 62 | 92 |