# Fußbefestigung, Serie MS1

**1827005872**

## AVENTICS Fußverbindungen



## Technische Daten

| | |
|---|---|
| Branche | Industrie |
| Version | breite Ausführung |
| Normierung | CNOMO / NFE 49-001 |
| geeigneter Kolbendurchmesser | 40 mm |

## Werkstoff

| | |
|---|---|
| Werkstoff | Aluminium |
| Oberfläche | kathodisch tauchlackiert |
| Materialnummer | 1827005872 |

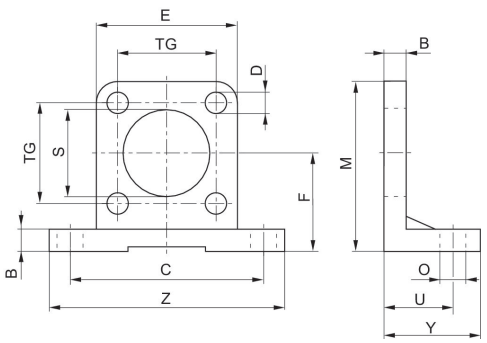

# Fußbefestigung, Serie MS1

1827005872

| Kolben-Ø | Material-nummer | B | C | D | E | F | M | O | S |
|---|---|---|---|---|---|---|---|---|---|
| 25 | 1827005870 | 8 | 58 | 7 | 40 | 30 | 50 | 9 | 25 |
| 32 | 1827005871 | 8 | 65 | 7 | 45 | 32 | 54 | 9 | 25 |
| 40 | 1827005872 | 8 | 72 | 7 | 52 | 36 | 62 | 9 | 32 |
| 50 | 1827005873 | 10 | 90 | 9 | 65 | 45 | 77 | 11 | 32 |
| 63 | 1827005874 | 10 | 100 | 9 | 75 | 50 | 87 | 11 | 45 |
| 80 | 1827005875 | 12 | 126 | 11 | 95 | 63 | 110 | 14 | 45 |
| 100 | 1827005876 | 12 | 148 | 11 | 115 | 73 | 130 | 14 | 55 |
| 125 | 1827005877 | 16 | 180 | 14 | 140 | 91 | 161 | 18 | 55 |
| 160 | 7472ZZ1483 | 20 | 230 | 18 | 180 | 115 | 205 | 22 | 65 |
| 200 | 7472ZZ1484 | 20 | 270 | 18 | 220 | 135 | 245 | 22 | 65 |

| Kolben-Ø | TG | U | Y | Z |
|---|---|---|---|---|
| 25 | 28 | 18 | 35 | 75 |
| 32 | 33 | 18 | 35 | 82 |
| 40 | 40 | 18 | 35 | 90 |
| 50 | 49 | 22 | 45 | 110 |
| 63 | 59 | 22 | 45 | 120 |
| 80 | 75 | 28 | 55 | 154 |
| 100 | 90 | 28 | 55 | 180 |
| 125 | 110 | 32 | 67.5 | 215 |
| 160 | 140 | 40 | 80 | 275 |
| 200 | 175 | 40 | 80 | 318 |