Piston rod cylinders, Series 102

1028300000

AVENTICS Series 102 Diaphragm type cylinder

The AVENTICS Series 102 is cost-efficient solution to generate high forces for press application for example.

- Coarse-pitch threads
- Piston rod: external thread
- Double-acting



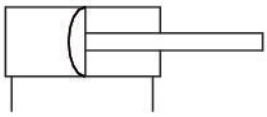

Technical data

Industry	Industrial
Type	Archive product: Do not use in new constructions!
Piston Ø	250 mm
Stroke	80 mm
Ports	G 1/2
Functional principle	Double-acting
Piston rod thread - type	External thread
Piston rod thread	M24
Pressure for determining piston forces	6 bar
Retracting piston force	24300 N
Extracting piston force	25000 N
Min. ambient temperature	-20 °C
Max. ambient temperature	70 °C
Min. working pressure	2 bar
Max. working pressure	8 bar
Weight	21.6 kg
Medium	Compressed air
Min. medium temperature	-20 °C
Max. medium temperature	70 °C

Max. particle size	50 µm
Min. oil content of compressed air	0 mg/m³
Max. oil content of compressed air	5 mg/m³

Material

Piston rod	Steel, chrome-plated
Seal material	Acrylonitrile butadiene rubber
Material, front cover	Steel, chrome-plated
Cylinder tube	Steel, chrome-plated
Part No.	1028300000

Technical information

Tolerance at 40 mm, 50 mm, 80 mm stroke: ± 3 mm

The pressure dew point must be at least 15 °C less than ambient and medium temperature and may not exceed 3 °C.

The oil content of compressed air must remain constant during the life cycle.

Use only the approved oils from AVENTICS. Further information can be found in the “Technical information” document (available in https://www.emerson.com/en-us/support).

Dimensions

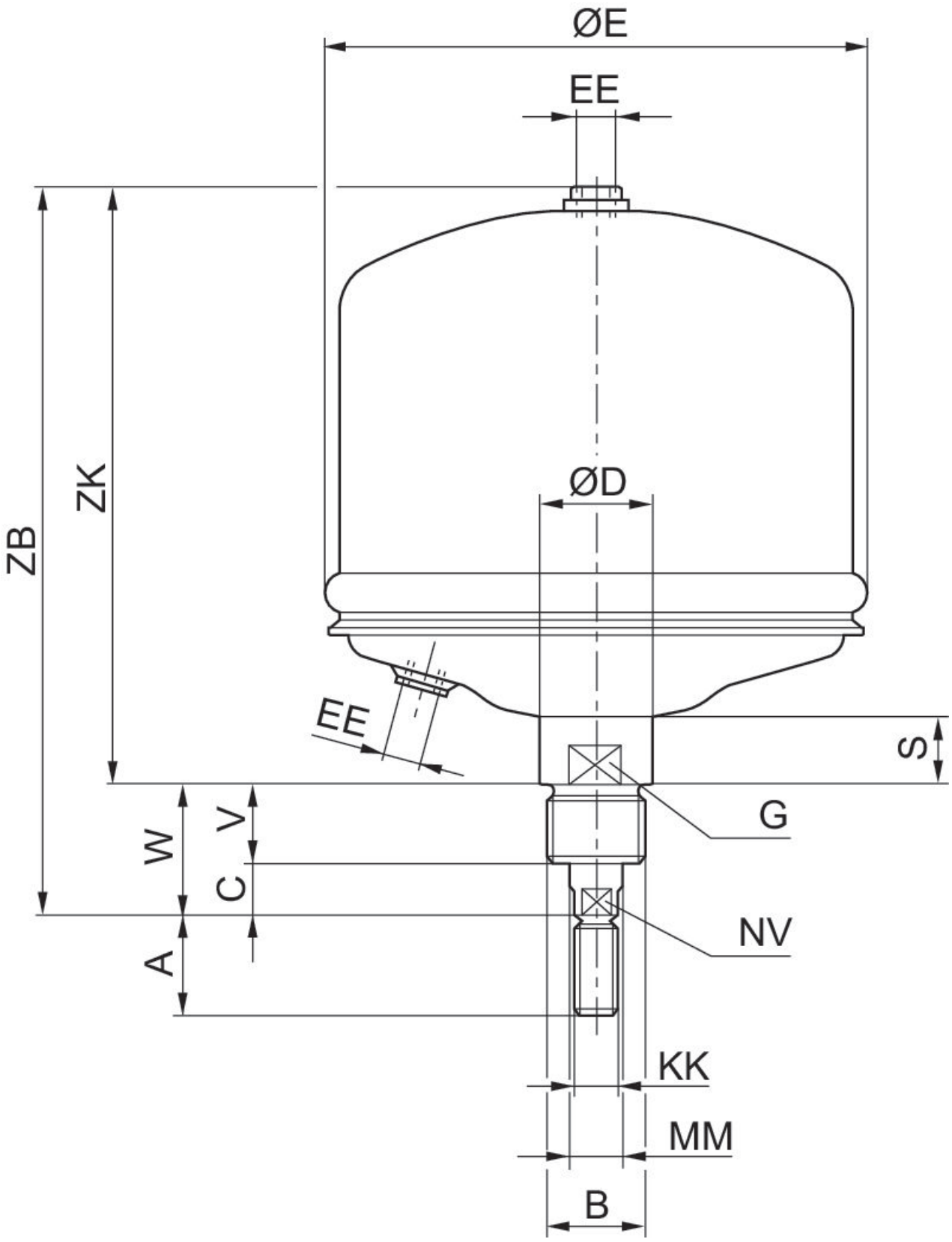

Piston rod cylinders, Series 102

1028300000

Part No.	Piston Ø	A	B	C	D	E	G	S	V	W
1028300000	250	48	M48x3	20	56	268	50	33	40	60

Part No.	Piston Ø	EE	KK	MM	NV	ZB	ZK
1028300000	250	G 1/2	M24	28	25	385	325

Overview drawing

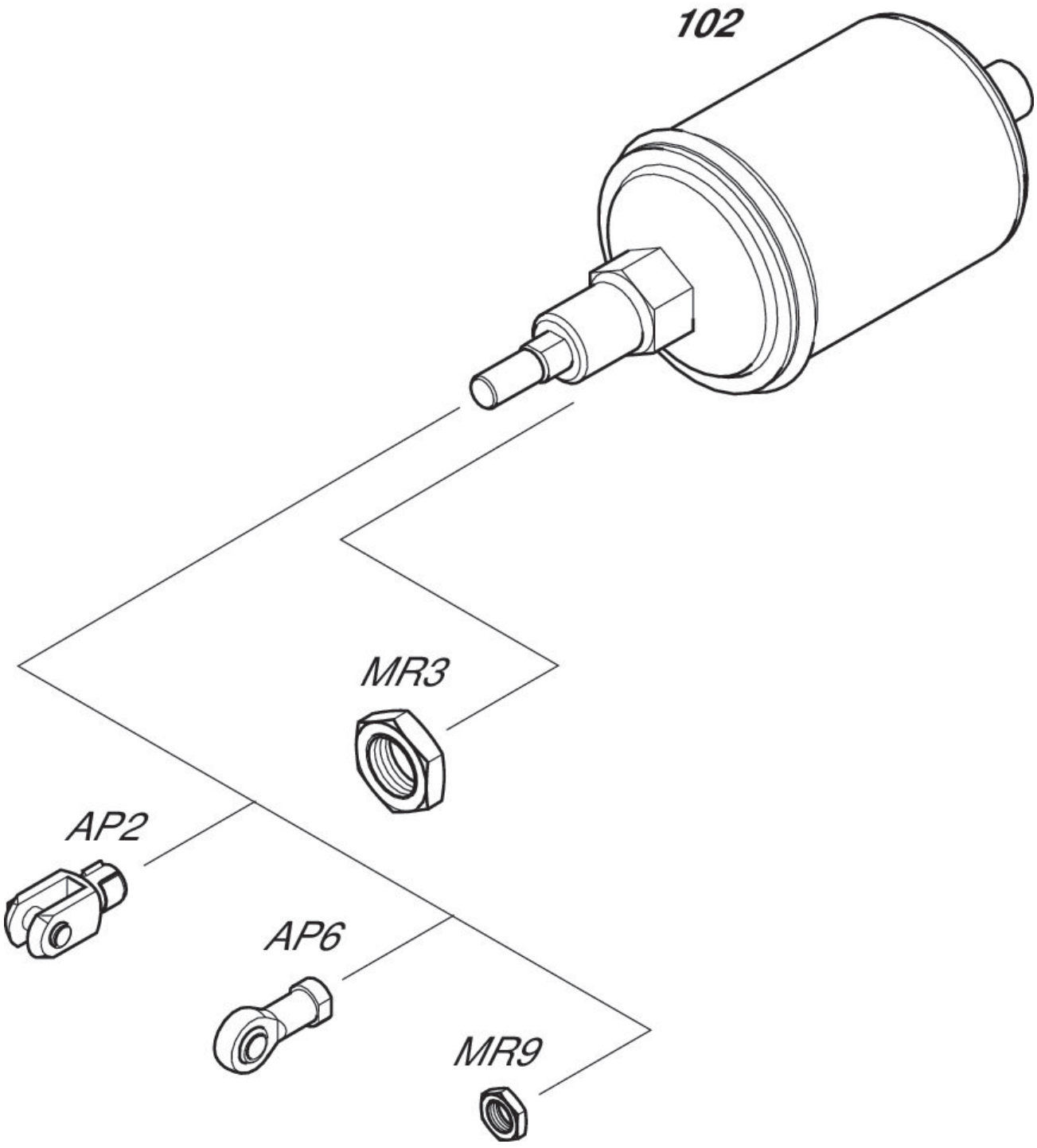

NOTE: This overview drawing is only for orientation to indicate where the various accessory parts can be fastened to the cylinder. The illustration has been simplified for this purpose. It is thus not possible to derive the dimensions from this overview.