Piston rod cylinders, Series 102

1027200000

AVENTICS Series 102 Diaphragm type cylinder

The AVENTICS Series 102 is cost-efficient solution to generate high forces for press application for example.

- Coarse-pitch threads
- Piston rod: external thread
- Single-acting, retracted without pressure



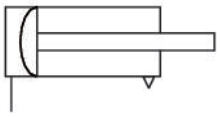

Technical data

Industry	Industrial
Type	Archive product: Do not use in new constructions!
Piston Ø	85 mm
Stroke	80 mm
Ports	G 1/4
Functional principle	Single-acting, retracted without pressure
Piston rod thread - type	External thread
Piston rod thread	M12
Pressure for determining piston forces	6 bar
Extracting piston force	3000 N
Min. ambient temperature	-20 °C
Max. ambient temperature	70 °C
Min. working pressure	2 bar
Max. working pressure	8 bar
Min. spring force	130 N
Max. spring force	320 N
Weight	1.5 kg
Medium	Compressed air
Min. medium temperature	-20 °C

Max. medium temperature	70 °C
Max. particle size	50 µm
Min. oil content of compressed air	0 mg/m³
Max. oil content of compressed air	5 mg/m³

Material

Piston rod	Steel, chrome-plated
Seal material	Acrylonitrile butadiene rubber
Material, front cover	Steel, chrome-plated
Cylinder tube	Steel, chrome-plated
Part No.	1027200000

Technical information

Tolerance at 40 mm, 50 mm, 80 mm stroke: ± 3 mm

Tolerance at 100 mm stroke: + 6 mm / -1 mm

The pressure dew point must be at least 15 °C less than ambient and medium temperature and may not exceed 3 °C.

The oil content of compressed air must remain constant during the life cycle.

Use only the approved oils from AVENTICS. Further information can be found in the “Technical information” document (available in https://www.emerson.com/en-us/support).

Dimensions

Piston rod cylinders, Series 102

1027200000

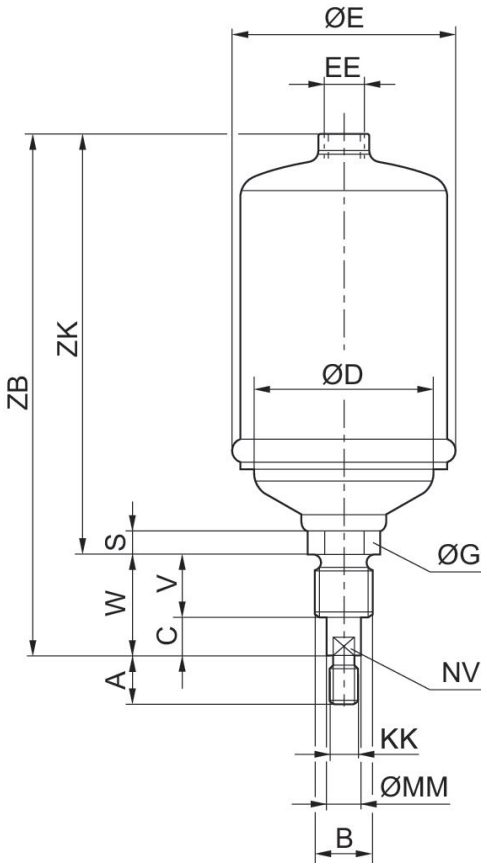

Part No.	Piston Ø	A	B	C	D	E	G	S	V	W
1027100000	60	24	M 24	11	54	66	30	18	30	41
1027200000	85	24	M24	11	77	93	30	18	30	41
1027300000	250	48	M48x3	20	56	268	50	33	40	60

Part No.	Piston Ø	EE	KK	MM	NV	ZB	ZK
1027100000	60	G 1/4	M12	14	12	222	181
1027200000	85	G 1/4	M12	14	12	222	181
1027300000	250	G 1/2	M24	28	25	385	325

Overview drawing

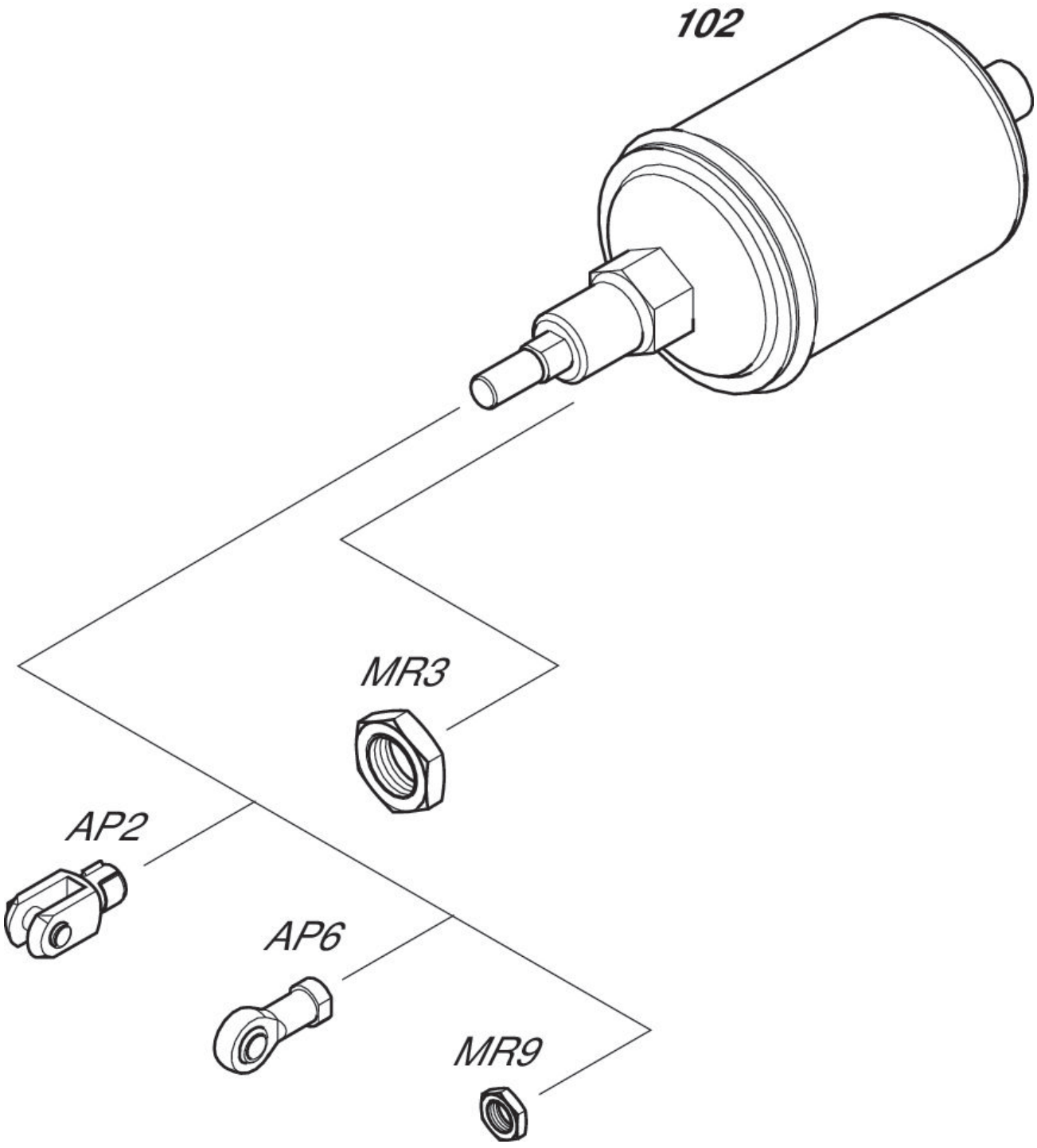

NOTE: This overview drawing is only for orientation to indicate where the various accessory parts can be fastened to the cylinder. The illustration has been simplified for this purpose. It is thus not possible to derive the dimensions from this overview.