Diaphragm-type cylinder, Series 102

1026200000

AVENTICS Series 102 Diaphragm type cylinder

The AVENTICS Series 102 is cost-efficient solution to generate high forces for press application for example.

- Coarse-pitch threads
- Piston rod: external thread
- Double-acting



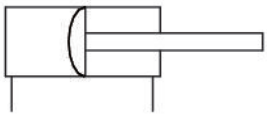

Technical data

Industry	Industrial
Type	Archive product: Do not use in new constructions!
Piston Ø	113 mm
Stroke	50 mm
Ports	G 1/4
Functional principle	Double-acting
Piston rod thread - type	External thread
Piston rod thread	M16
Pressure for determining piston forces	6 bar
Retracting piston force	5800 N
Extracting piston force	6000 N
Min. ambient temperature	-20 °C
Max. ambient temperature	70 °C
Min. working pressure	2 bar
Max. working pressure	8 bar
Min. spring force	100 N
Weight	5.4 kg
Medium	Compressed air
Min. medium temperature	-20 °C

Max. medium temperature	70 °C
Max. particle size	50 µm
Min. oil content of compressed air	0 mg/m³
Max. oil content of compressed air	5 mg/m³

Material

Piston rod	Steel, chrome-plated
Seal material	Acrylonitrile butadiene rubber
Material, front cover	Steel, chrome-plated
Cylinder tube	Steel, chrome-plated
Part No.	1026200000

Technical information

Diaphragm actuator strokes are tolerance-dependent.

Tolerance at 40 mm, 50 mm, 80 mm stroke: ± 3 mm

The pressure dew point must be at least 15 °C less than ambient and medium temperature and may not exceed 3 °C.

The oil content of compressed air must remain constant during the life cycle.

Use only the approved oils from AVENTICS. Further information can be found in the “Technical information” document (available in https://www.emerson.com/en-us/support).

Dimensions

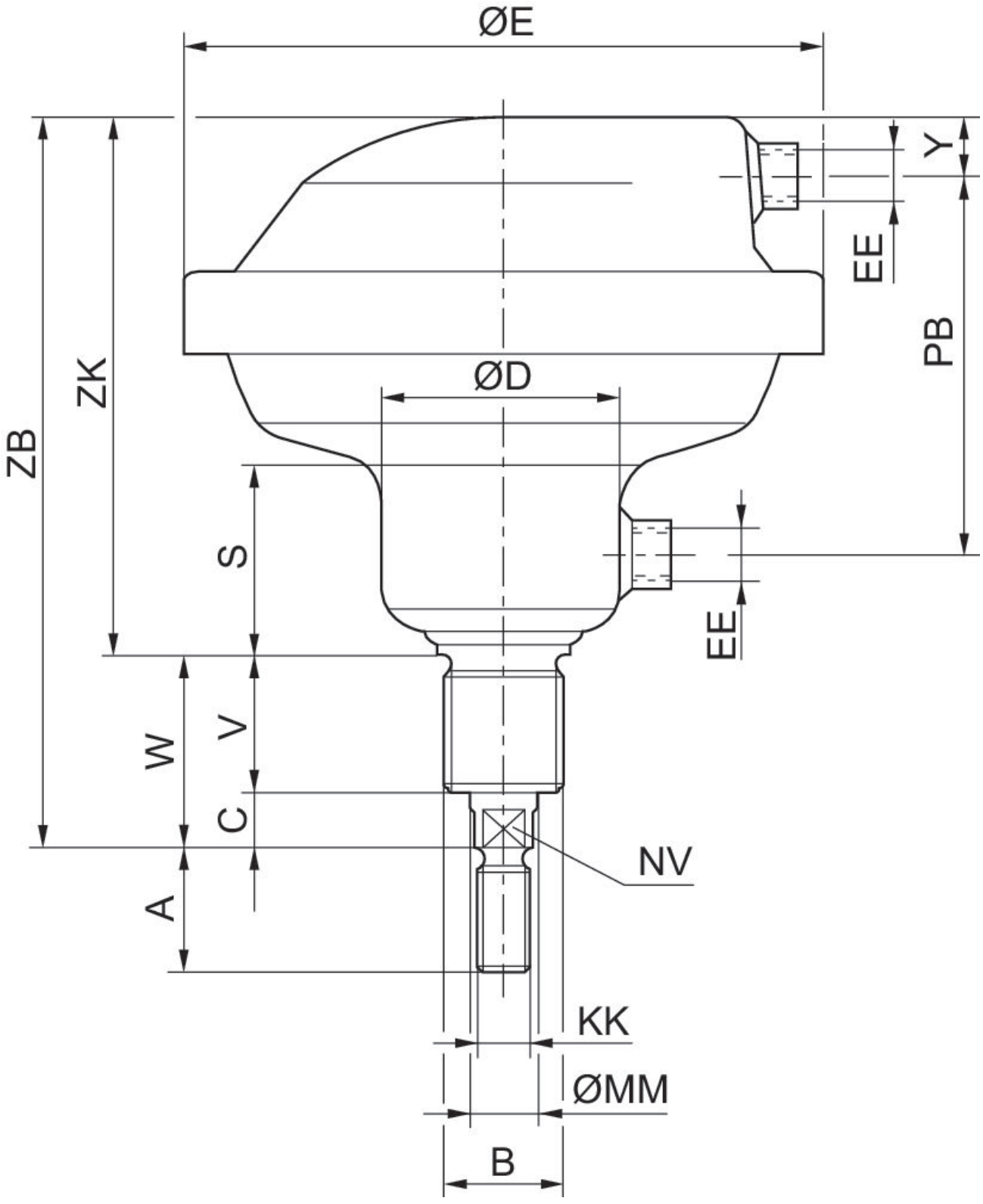

Part No.	Piston Ø	A	B	C	D	E	S	V	W	Y
1026100000	80	24	M24x2	14	55	150	48	38	52	15
1026200000	113	32	M36x3	20	71	195	55	38	58	15
1026300000	160	40	M36x3	20	88	261	58	45	65	26

Part No.	Piston Ø	EE	KK	MM	NV	PB	ZB	ZK
1026100000	80	G 1/4	M12	16	13	90	183	131
1026200000	113	G 1/4	M16	20	17	107	212	154
1026300000	160	G 1/2	M20	25	22	117	243	178

Overview drawing

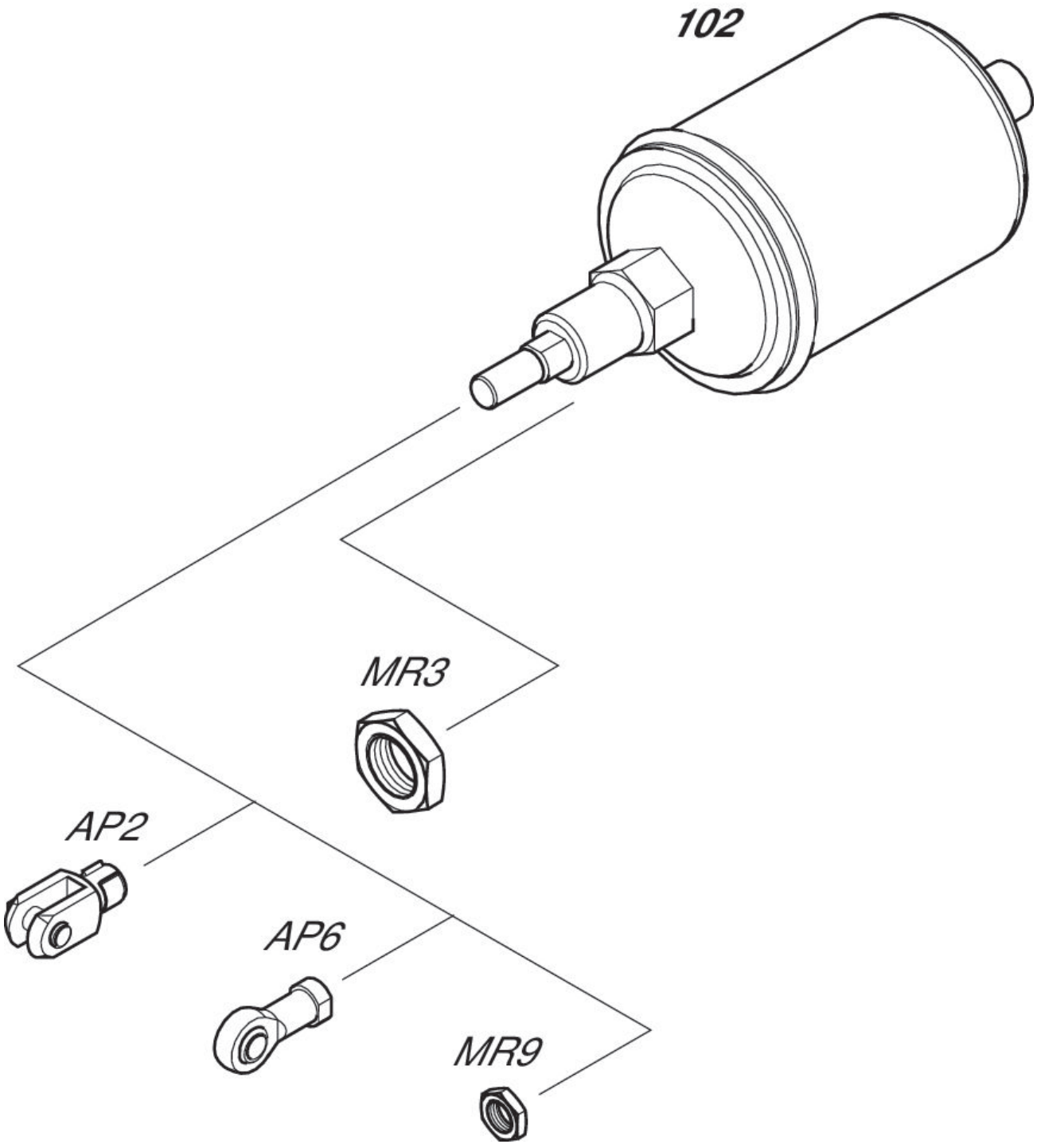

NOTE: This overview drawing is only for orientation to indicate where the various accessory parts can be fastened to the cylinder. The illustration has been simplified for this purpose. It is thus not possible to derive the dimensions from this overview.