Rack-and-pinion gears, Series TRR

0822933206

AVENTICS Series TRR Rotary actuators

The AVENTICS Series TRR is a rotary cylinder based on two ISO cylinders and a rack and pinion gearbox to generate high torques with adjustable angle.

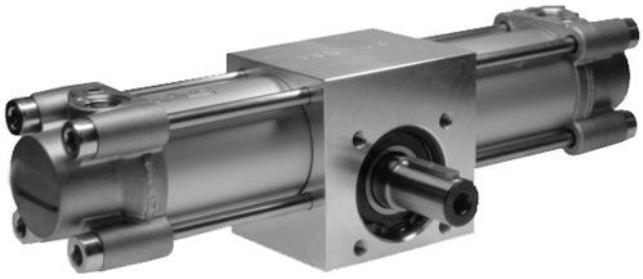

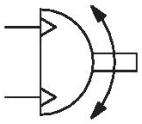

Technical data

Industry	Industrial
Diameter	63 mm
Compressed air connection	G 3/8
Magnetic piston	with magnetic piston
Rotary compact module version	Double piston with rack
Frame size	TRR-63
Axis diameter	25 mm
Theoretical torque at	6,3 bar
Rotation angle tolerance	0° / +5°
Direction of rotation	counterclockwise
Max. play (radial)	1 °
Theoretical torque	29 Nm
Cushioning	Pneumatic adjustable cushioning
Cushioning	Non-adjustable
Cushioning angle	49 °
Stroke/10° angle of rotation	3.5 mm
Min. angle of rotation	0 °
Max. angle of rotation	360 °
Tolerance in 0° position not under pressure min.	-2 °

Max. tolerance in 0° position not under pressure	2 °
Min. working pressure	2 bar
Max. working pressure	10 bar
Min. ambient temperature	-20 °C
Max. ambient temperature	80 °C
Min. medium temperature	-20 °C
Max. medium temperature	80 °C
Medium	Compressed air
Min. oil content of compressed air	0 mg/m³
Max. oil content of compressed air	1 mg/m³
Max. particle size	5 µm
Weight	7.1 kg

Material

Housing material	Aluminum
Material front cover	Die-cast aluminum
Seal material	Polyurethane
Material axis	Steel, chrome-plated
Part No.	0822933206

Technical information

The pressure dew point must be at least 15 °C less than ambient and medium temperature and may not exceed 3 °C.

Dimensions

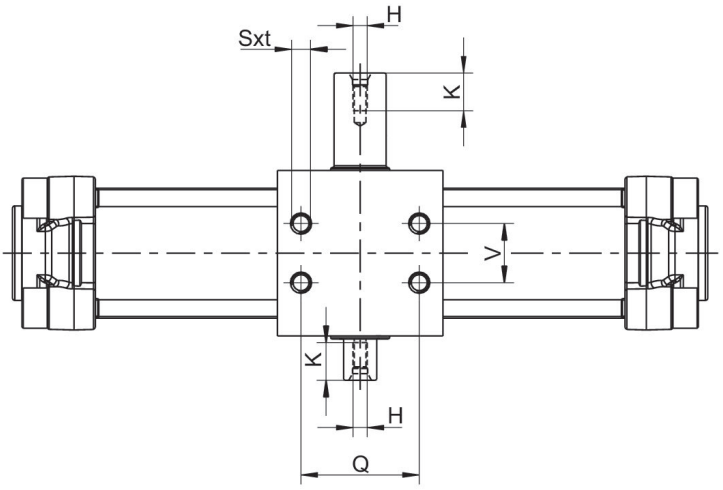

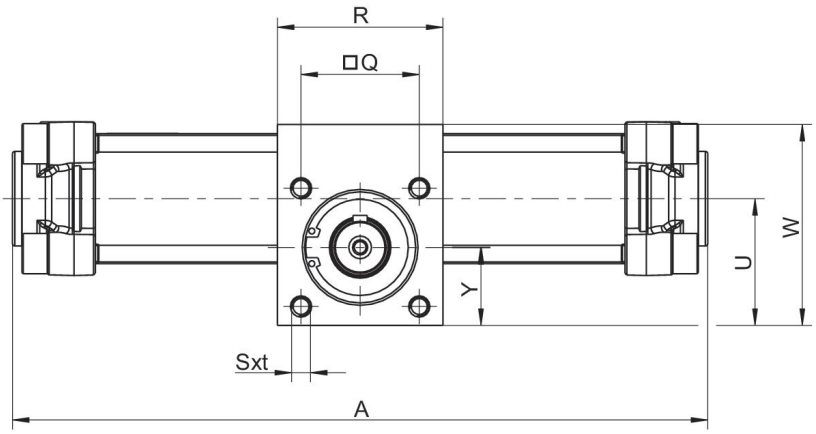

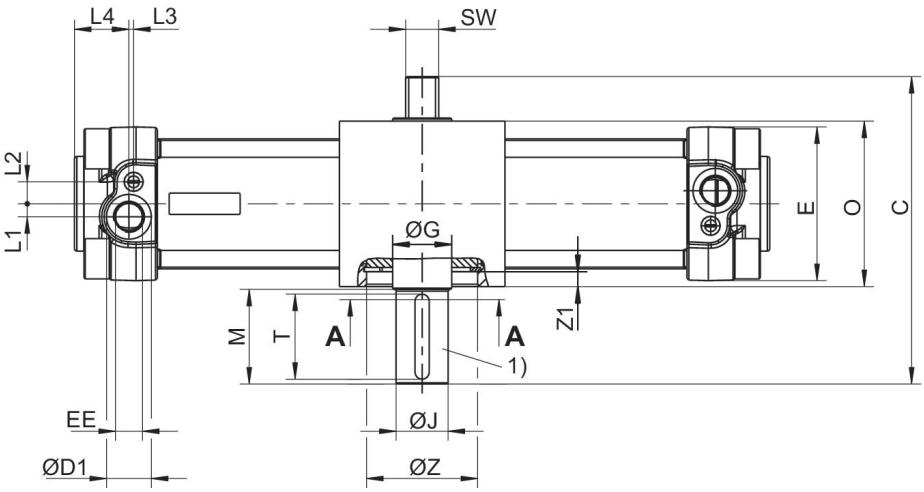

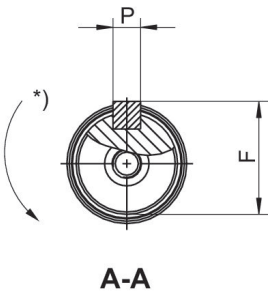

1) Parallel key and slot dimensions according to DIN 6885
* Direction of rotation

Rack-and-pinion gears, Series TRR

0822933206

Frame size	Ø	C	ØD1	E	EE	F	ØG	H	ØJ k6	L1
TRR-32	32	103.5	15	47	G 1/8	16	17	M5x12,5	14	5
TRR-40	40	110	19	53	G 1/4	19	20	M5x12,5	17	5.5
TRR-50	50	130	19	65	G 1/4	24.5	25	M6x16	22	5.5
TRR-63	63	142.5	23	75	G 3/8	28	30	M8x19	25	9
TRR-80	80	175	23	95	G 3/8	33	35	M8x19	30	8
TRR-100	100	190	27	115	G 1/2	38	40	M10x22	35	12

Frame size	L2	L3	L4	M	O	P	Q	R	Sxt	SW
TRR-32	7.5	4.2	20	30	55	5x25	33	63	M6x9	11
TRR-40	9.5	5.2	24	30	60	5x25	40	70	M6x9	13
TRR-50	9.3	2	23	40	70	6x36	50	70	M8x12	14
TRR-63	11.7	2	28	40	80	8x36	60	80	M8x12	17
TRR-80	15	2.5	28	50	100	8x45	80	106	M10x15	22
TRR-100	14	4	29	50	114	10x45	80	125	M10x15	22

Frame size	U	V	W	Y	ØZ H7	Z1
TRR-32	40.7	18	63	25	35	4
TRR-40	43.5	22	70	26.5	42	4.25
TRR-50	53.5	25	85	33	47	6.25
TRR-63	65	35	105	40	55	7
TRR-80	84.5	50	135	53	62	9.5
TRR-100	91.5	60	150	53	80	16.5

Rotation angle setting

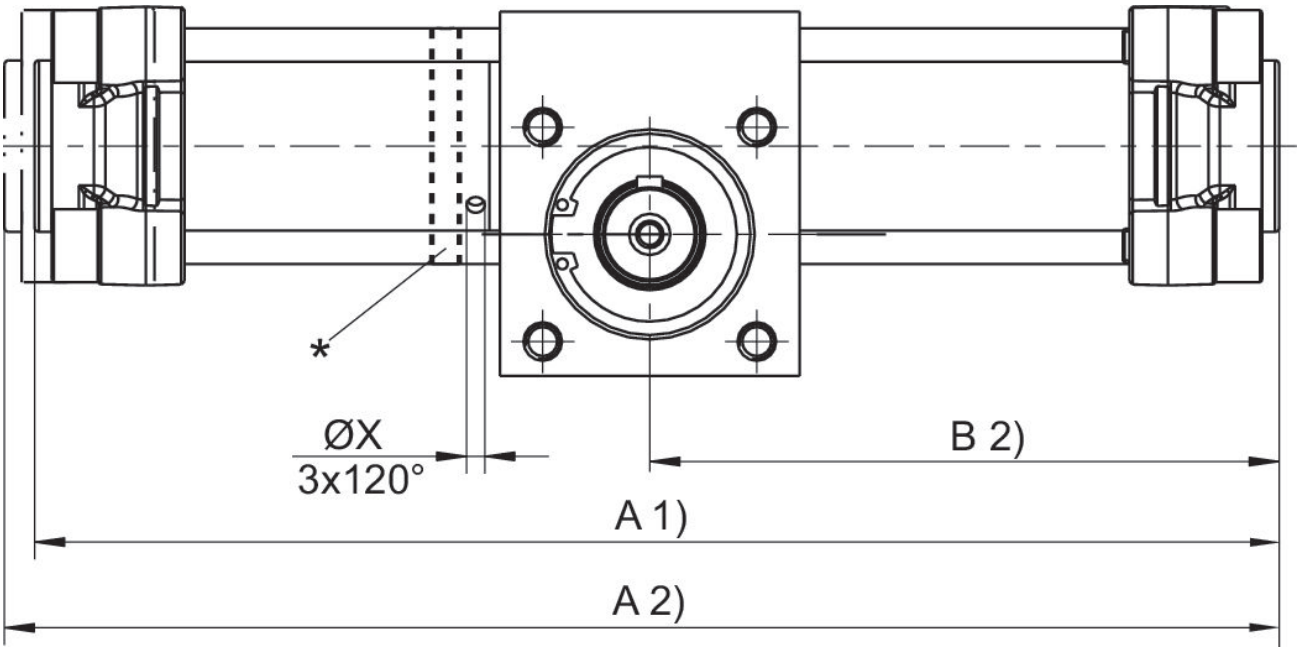

* Rotation angle setting via rotation of the setting ring. The nuts of the tie rod must be loosened and tightened with the torque Ma. 0-position: parallel key on top (piston stop on the right).
Tightening torque TRR-50, TRR-63: 9-10 Nm Tightening torque TRR-80, TRR-100: 18-20 Nm
1) Min.
2) Max.

Adjustable angle of rotation

Frame size	Ø	A 1) 90°	A 1) 180°	A 1) 360°	A 2) 90°	A 2) 180°	A 2) 360°	B 2) 90°	B 2) 180°	B 2) 360°
TRR-50	50	292	339	434	299	345	440	150	173	220
TRR-63	63	337	400	525	344	407	533	173	204	267
TRR-80	80	388	458	600	399	470	611	200	235	306
TRR-100	100	440	533	722	451	544	733	226	273	366

Frame size	ØX
TRR-50	4.2
TRR-63	4.2
TRR-80	4.2
TRR-100	4.2

1) Min.
2) Max.

Non-adjustable angle of rotation

Frame size	Ø	A 2) 90°	A 2) 180°	A 2) 360°	B 2) 90°	B 2) 180°	B 2) 360°	ØX
TRR-32	32	251	285	357	126	143	179	–
TRR-40	40	265	304	383	133	152	192	–
TRR-50	50	295	342	436	148	171	218	–
TRR-63	63	338	401	527	169	200	264	–
TRR-80	80	390	460	602	195	230	301	–
TRR-100	100	440	536	724	220	268	362	–

2) Max.

Permissible mass moment of inertia (kg m²) depending on size and angular velocity (per second)

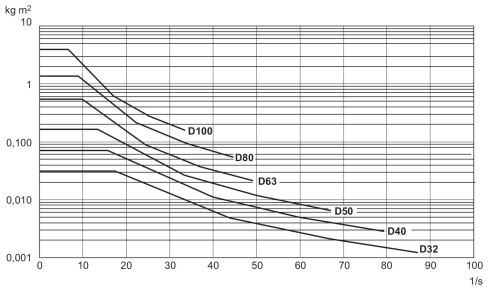

Max. permissible axial Fx [N] and radial Fy [N] transverse force on the drive pin

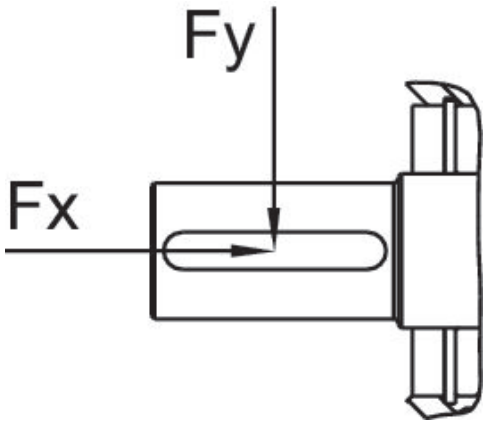

Frame size	Ø	Fx [N]	Fy [N]
TRR-32	32	400	630
TRR-40	40	600	1000
TRR-50	50	800	1150
TRR-63	63	1000	1500
TRR-80	80	1200	1800