Guide unit GH2, Series CG1

0821401395

AVENTICS Guide units

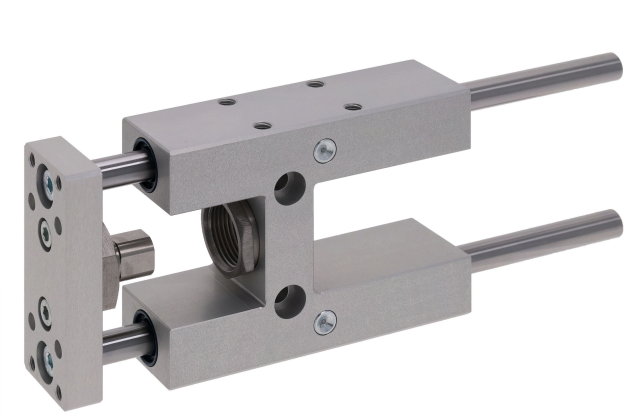

Technical data

Industry	Industrial
Piston Ø	12 mm
Stroke	50 mm
Bearing type	Linear ball bearing
For standard cylinders	ISO 6432
Min. ambient temperature	-20 °C
Max. ambient temperature	80 °C
Weight 0 mm stroke	0.395 kg
Weight +10 mm stroke	0.0078 kg

Material

Bearing housings	Aluminum
Surface bearing housing	colorless anodized
Bearing type	Steel, chrome-plated
Carrying plate	Aluminum
Surface carrying plate	colorless anodized
Material flexible coupling in carrying plate	Stainless Steel
Material guide rods	Hardened heat-treated steel
Part No.	0821401395

Technical information
Guide units for cylinder Ø 12 also fit on cylinder Ø 16

Dimensions

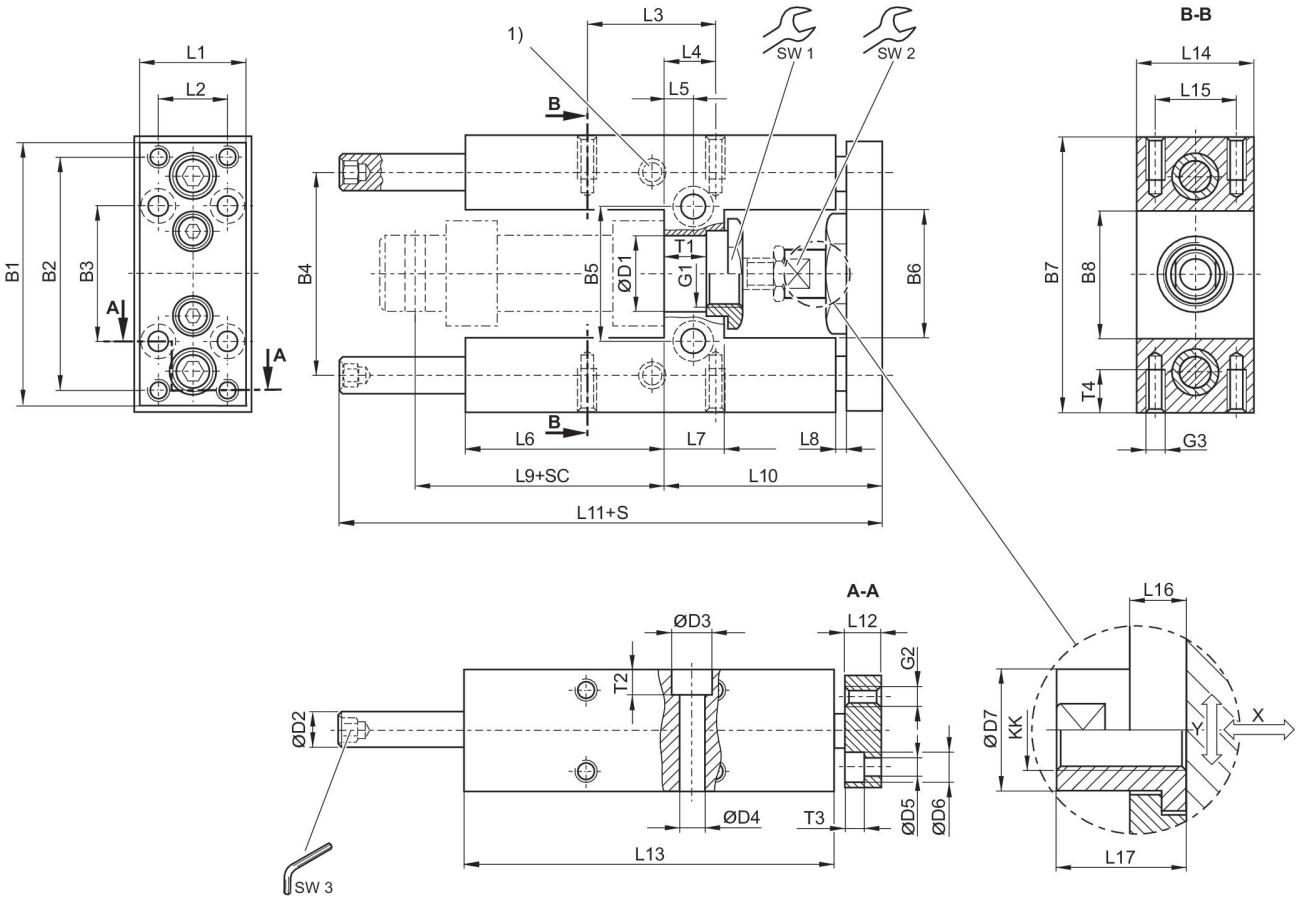

1) Lube nipple
S = stroke
SC = cylinder stroke
X = max. play (axial)
Y = min. play (radial)
Hexagon in guide rod

Piston Ø	Part No.	B1	B2	B3	B4	B5	B6	B7	B8	D1
12	**0821401395**	63	54	32	46	24	27	65	27	16 H7
20	0821401300	76	68	40	58	38	37	79	37	22 H7
25	0821401310	76	68	40	58	38	37	79	37	22 H7

Piston Ø	D2	D3	D4	D5	D6	D7	G1	G2	G3	KK
12	8	–	5.5	4.5	8	10	M16x1,5	M4	M4	M6
20	10	11	6.6	5.5	10.5	14.5	M22x1,5	M5	M6	M8
25	10	11	6.6	5.5	10.5	14.5	M22x1,5	M5	M6	M10x1,25

Piston Ø	L1	L2	L3	L4	L5	L6	L7	L8	L9	L10
12	27	15	32.5	11	6.5	37	13	3	52.6	51
20	32	20	32.5	15	8.5	58	17	3	71	65
25	32	20	32.5	15	8.5	58	17	3	76	65

Piston Ø	L11	L12	L13	L14	L15	L16	L17	SW1	SW2	SW3
12	133	10	75	30	22	7	18	19	8	4
20	160.5	12	108	34	23	6	22	27	13	5
25	160.5	12	108	34	23	6	17	27	13	5

Piston Ø	T1	T2	T3	T4
12	10.6	–	4.6	8
20	11	7	5.7	14
25	11	7	5.7	14

Useful load

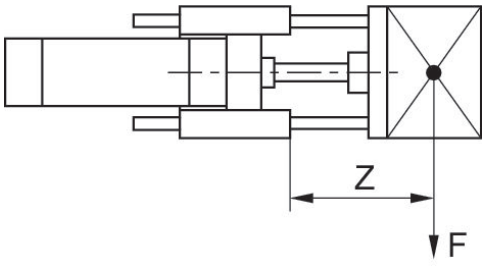

F = Useful load, Z = Projection

Useful load

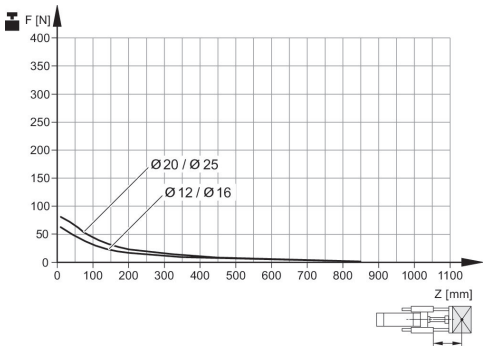

Service life 5x10⁶ m
F = Useful load, Z = Projection

Bending due to own load

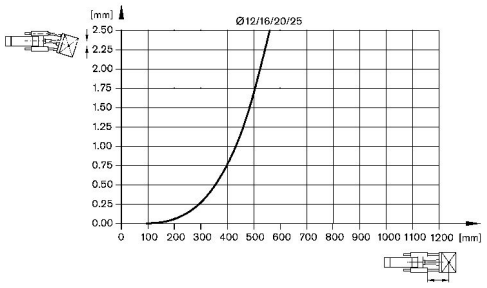

Bending due to 10 N load

