Guide unit GH1, Series CG1

0821401214

AVENTICS Guide units

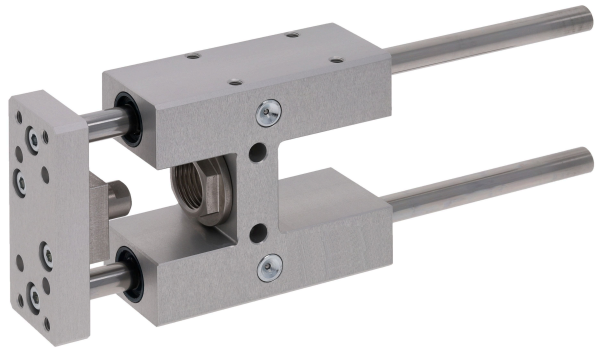

Technical data

Industry	Industrial
Piston Ø	25 mm
Stroke	250 mm
Bearing type	Plain bearing
For standard cylinders	ISO 6432
Min. ambient temperature	-20 °C
Max. ambient temperature	80 °C
Weight 0 mm stroke	0.73 kg
Weight +10 mm stroke	0.0122 kg

Material

Bearing housings	Aluminum
Surface bearing housing	colorless anodized
Bearing type	Sintered bronze
Carrying plate	Aluminum
Surface carrying plate	colorless anodized
Material flexible coupling in carrying plate	Stainless Steel
Material guide rods	Hardened heat-treated steel
Surface guide rods	ground

Guide unit GH1, Series CG1

0821401214

Part No.	0821401214

Technical information

Guide units for cylinder Ø 12 also fit on cylinder Ø 16

Dimensions

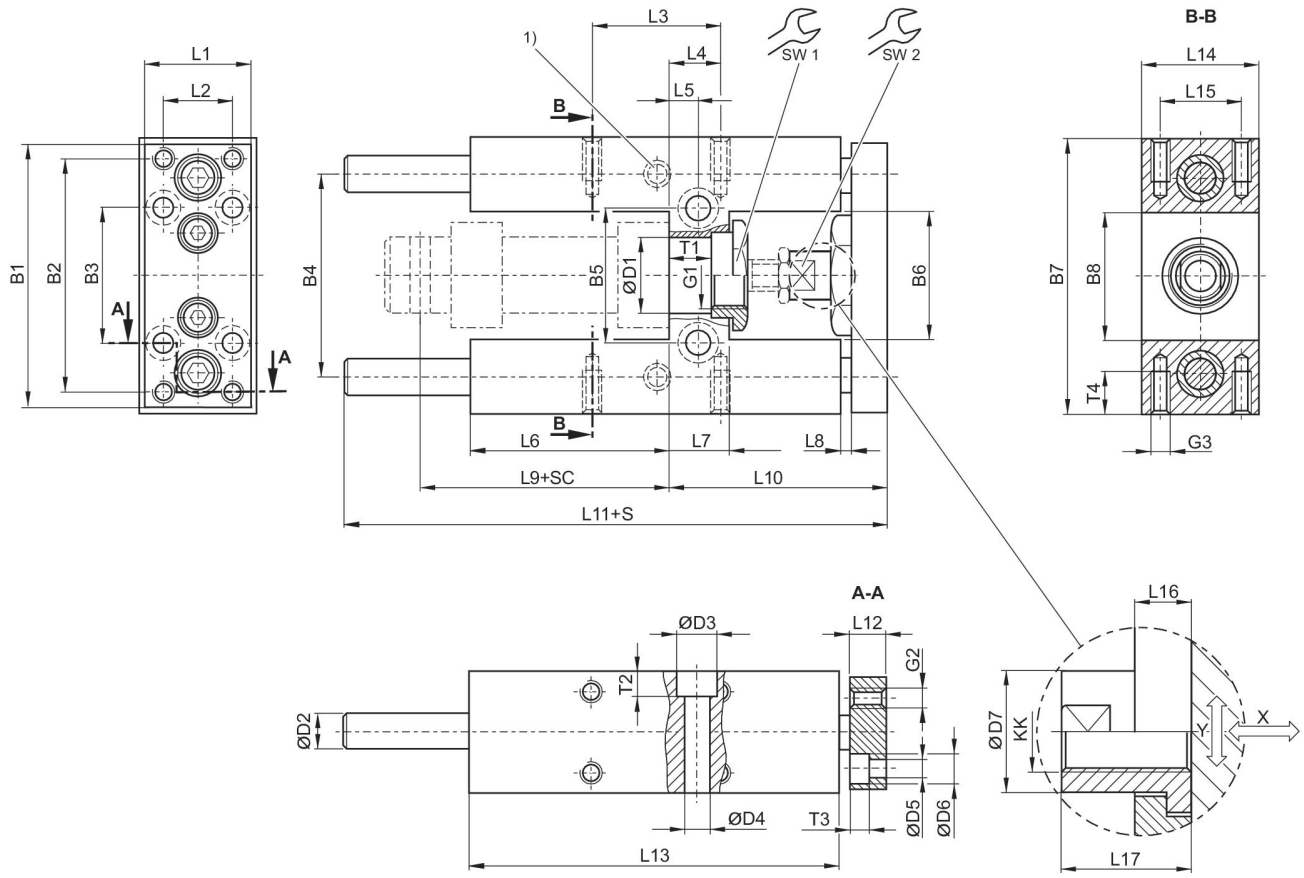

1) Lube nipple
S = stroke
SC = cylinder stroke
X = max. play (axial)
Y = min. play (radial)

Piston Ø	Part No.	B1	B2	B3	B4	B5	B6	B7	B8	D1
12	0821401295	63	54	32	46	24	27	65	27	16 H7
20	0821401200	76	68	40	58	38	37	79	37	22 H7
25	0821401210	76	68	40	58	38	37	79	37	22 H7

Piston Ø	D2	D3	D4	D5	D6	D7	G1	G2	G3	KK
12	8	–	5.5	4.5	8	10	M16x1,5	M4	M4	M6
20	10	11	6.6	5.5	10.5	14.5	M22x1,5	M5	M6	M8
25	10	11	6.6	5.5	10.5	14.5	M22x1,5	M5	M6	M10x1,25

Piston Ø	L1	L2	L3	L4	L5	L6	L7	L8	L9	L10
12	27	15	32.5	11	6.5	37	13	3	52.6	51
20	32	20	32.5	15	8.5	58	17	3	71	65
25	32	20	32.5	15	8.5	58	17	3	76	65

Piston Ø	L11	L12	L13	L14	L15	L16	L17	SW1	SW2	T1
12	133	10	75	30	22	7	18	19	8	10.6
20	160.5	12	108	34	23	6	22	27	13	11
25	160.5	12	108	34	23	6	17	27	13	11

Piston Ø	T2	T3	T4
12	–	4.6	8
20	7	5.7	14
25	7	5.7	14

Useful load

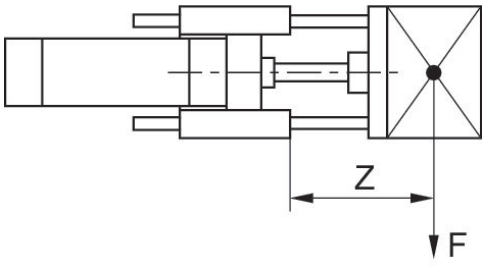

F = Useful load, Z = Projection

Useful load

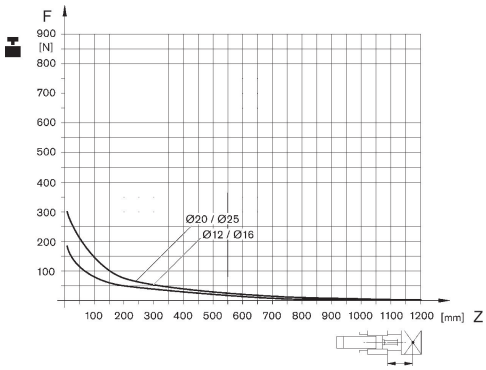

F = Useful load, Z = Projection

Bending due to own load

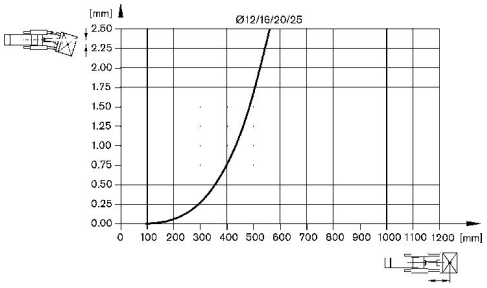

Bending due to 10 N load

