# Guide unit GH1, Series CG1

**0821401204**

**AVENTICS Guide units**

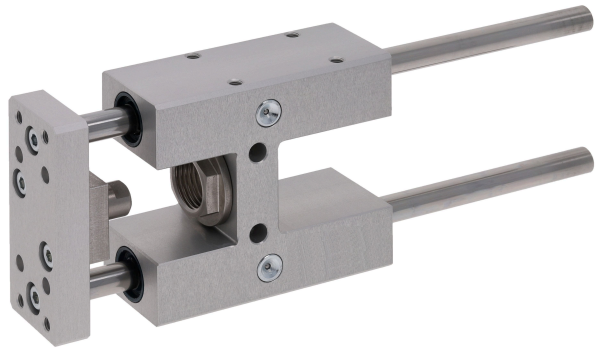

## Technical data

| | |
|---|---|
| Industry | Industrial |
| Piston Ø | 20 mm |
| Stroke | 250 mm |
| Bearing type | Plain bearing |
| For standard cylinders | ISO 6432 |
| Min. ambient temperature | -20 °C |
| Max. ambient temperature | 80 °C |
| Weight 0 mm stroke | 0.73 kg |
| Weight +10 mm stroke | 0.0122 kg |

## Material

| | |
|---|---|
| Bearing housings | Aluminum |
| Surface bearing housing | colorless anodized |
| Bearing type | Sintered bronze |
| Carrying plate | Aluminum |
| Surface carrying plate | colorless anodized |
| Material flexible coupling in carrying plate | Stainless Steel |
| Material guide rods | Hardened heat-treated steel |
| Surface guide rods | ground |

# Guide unit GH1, Series CG1

0821401204

| | |
|---|---|
| Part No. | 0821401204 |

## Technical information

Guide units for cylinder Ø 12 also fit on cylinder Ø 16

## Dimensions

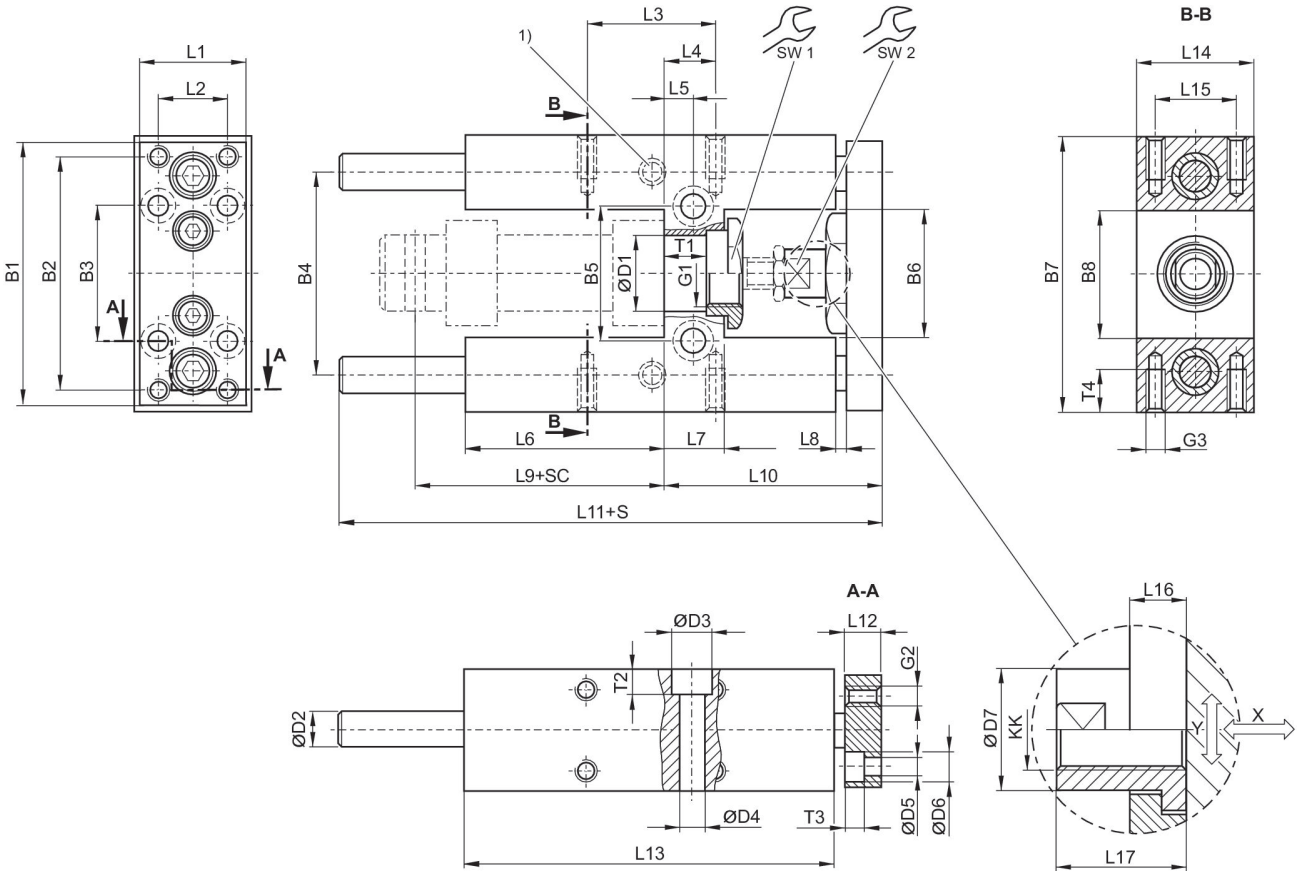


1) Lube nipple
S = stroke
SC = cylinder stroke
X = max. play (axial)
Y = min. play (radial)

| Piston Ø | Part No. | B1 | B2 | B3 | B4 | B5 | B6 | B7 | B8 | D1 |
|---|---|---|---|---|---|---|---|---|---|---|
| 12 | 0821401295 | 63 | 54 | 32 | 46 | 24 | 27 | 65 | 27 | 16 H7 |
| 20 | 0821401200 | 76 | 68 | 40 | 58 | 38 | 37 | 79 | 37 | 22 H7 |
| 25 | 0821401210 | 76 | 68 | 40 | 58 | 38 | 37 | 79 | 37 | 22 H7 |

| Piston Ø | D2 | D3 | D4 | D5 | D6 | D7 | G1 | G2 | G3 | KK |
|---|---|---|---|---|---|---|---|---|---|---|
| 12 | 8 | – | 5.5 | 4.5 | 8 | 10 | M16x1,5 | M4 | M4 | M6 |
| 20 | 10 | 11 | 6.6 | 5.5 | 10.5 | 14.5 | M22x1,5 | M5 | M6 | M8 |
| 25 | 10 | 11 | 6.6 | 5.5 | 10.5 | 14.5 | M22x1,5 | M5 | M6 | M10x1,25 |

| Piston Ø | L1 | L2 | L3 | L4 | L5 | L6 | L7 | L8 | L9 | L10 |
|---|---|---|---|---|---|---|---|---|---|---|
| 12 | 27 | 15 | 32.5 | 11 | 6.5 | 37 | 13 | 3 | 52.6 | 51 |
| 20 | 32 | 20 | 32.5 | 15 | 8.5 | 58 | 17 | 3 | 71 | 65 |
| 25 | 32 | 20 | 32.5 | 15 | 8.5 | 58 | 17 | 3 | 76 | 65 |

| Piston Ø | L11 | L12 | L13 | L14 | L15 | L16 | L17 | SW1 | SW2 | T1 |
|---|---|---|---|---|---|---|---|---|---|---|
| 12 | 133 | 10 | 75 | 30 | 22 | 7 | 18 | 19 | 8 | 10.6 |
| 20 | 160.5 | 12 | 108 | 34 | 23 | 6 | 22 | 27 | 13 | 11 |
| 25 | 160.5 | 12 | 108 | 34 | 23 | 6 | 17 | 27 | 13 | 11 |

| Piston Ø | T2 | T3 | T4 |
|---|---|---|---|
| 12 | – | 4.6 | 8 |
| 20 | 7 | 5.7 | 14 |
| 25 | 7 | 5.7 | 14 |

## Useful load

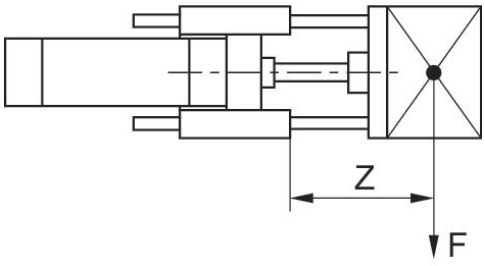


F = Useful load, Z = Projection

## Useful load

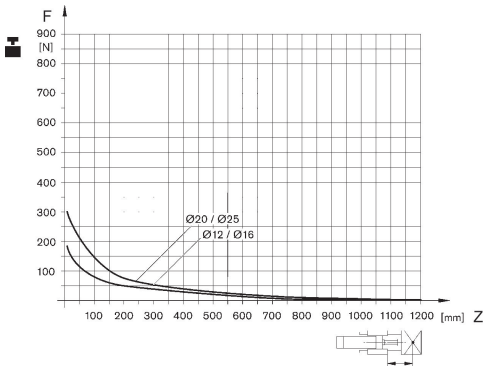


F = Useful load, Z = Projection

## Bending due to own load

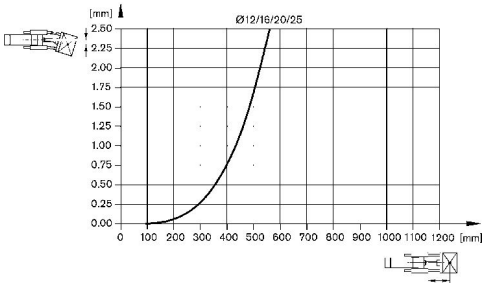


## Bending due to 10 N load

