Filter, Series NL4-FLS

0821303502

AVENTICS Series NL4 Air Preparation Units

The AVENTICS Series NL maintenance units are suitable for all areas: as individual components or as assembled maintenance units, for centralized or decentralized compressed air preparation, in compact or powerful versions, for use in high or low temperatures. This line offers a complete, customizable compressed air preparation technology. It includes an option to combine every component in the Series to achieve the desired function, making it possible to adjust the components precisely to the application requirements.



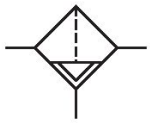

Technical data

Industry	Industrial
Parts	Filter
Reservoir	reservoir, metal, with inspection glass
Port	G 1/2
Filter porosity	5 µm
Nominal flow Qn	4000 l/min
Condensate drain	semi-automatic, open without pressure
Min. working pressure	1.5 bar
Max. working pressure	16 bar
Min. ambient temperature	-10 °C
Max. ambient temperature	60 °C
Medium	Compressed air Neutral gases
Max. achievable compressed air class acc. to ISO 8573-1:2010	6 : 7 : -
Filter reservoir volume	50 cm³
Filter element	exchangeable
Weight	1.23 kg
inspection glass	with window
Mounting orientation	vertical

Type	Can be assembled into blocks

Material

Housing material	Die cast zinc
Material front plate	Acrylonitrile butadiene styrene
Seal material	Acrylonitrile butadiene rubber
Material reservoir	Die cast zinc
Material filter insert	Cellpor
Part No.	0821303502

Technical information

The pressure dew point must be at least 15 °C less than ambient and medium temperature and may not exceed 3 °C.

Note: Polycarbonate reservoirs are susceptible to solvents, supplementary information can be found at "Customer information".

A change in the flow direction (from air supply on the left to air supply on the right) occurs by rotating installation by 180° about the vertical axis. Please see the operating instructions for further details.

Also suitable for separation of fluid oil or water due to the design.

Nominal flow Qn with secondary pressure p2 = 6 bar at Δp = 1 bar

Dimensions

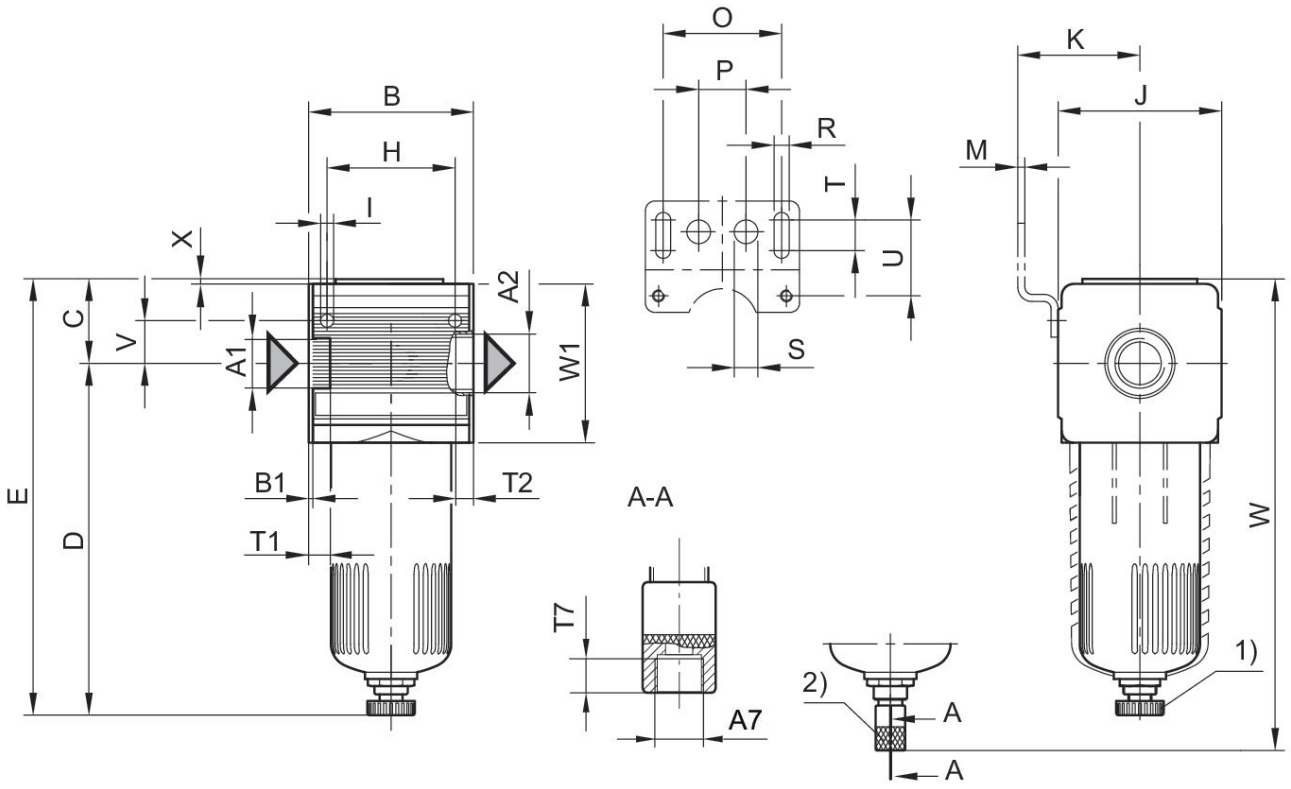

A1 = input A2 = output
A7 = condensate drain
1) Semi-automatic condensate drain 2) fully automatic condensate drain

Flow rate characteristic, p2 = 0,05 - 7 bar

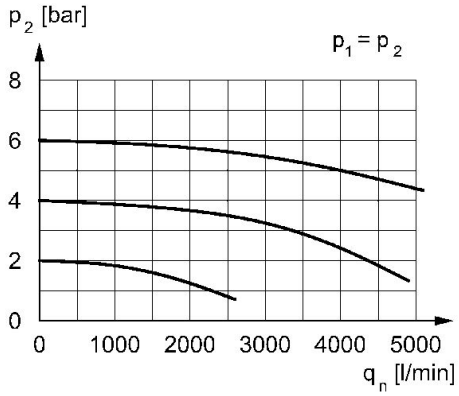

p2 = secondary pressure qn = nominal flow

Dimensions in mm

Part No.	A1	A2	A7	B	B1	C	D	E	H	I
0821303500	G 1/2	G 1/2	G 1/8	69.6	1.8	36.5	146.5	183	54	5.5
0821303501	G 1/2	G 1/2	G 1/8	69.6	1.8	36.5	146.5	183	54	5.5
0821303502	G 1/2	G 1/2	G 1/8	69.6	1.8	36.5	146.5	183	54	5.5
0821303503	G 1/2	G 1/2	G 1/8	69.6	1.8	36.5	146.5	183	54	5.5
0821303504	G 1/2	G 1/2	G 1/8	69.6	1.8	36.5	146.5	183	54	5.5
0821303505	G 1/2	G 1/2	G 1/8	69.6	1.8	36.5	146.5	183	54	5.5
0821303540	G 3/4	G 3/4	G 1/8	69.6	1.8	36.5	146.5	183	54	5.5
0821303541	G 3/4	G 3/4	G 1/8	69.6	1.8	36.5	146.5	183	54	5.5
0821303542	G 3/4	G 3/4	G 1/8	69.6	1.8	36.5	146.5	183	54	5.5
0821303543	G 3/4	G 3/4	G 1/8	69.6	1.8	36.5	146.5	183	54	5.5
0821303544	G 3/4	G 3/4	G 1/8	69.6	1.8	36.5	146.5	183	54	5.5
0821303545	G 3/4	G 3/4	G 1/8	69.6	1.8	36.5	146.5	183	54	5.5

Part No.	J	K	M	O	P	R	S	T	T1	T2
0821303500	69	54.5	3	50	20	6.4	10	13	13	13
0821303501	69	54.5	3	50	20	6.4	10	13	13	13
0821303502	69	54.5	3	50	20	6.4	10	13	13	13
0821303503	69	54.5	3	50	20	6.4	10	13	13	13
0821303504	69	54.5	3	50	20	6.4	10	13	13	13
0821303505	69	54.5	3	50	20	6.4	10	13	13	13
0821303540	69	54.5	3	50	20	6.4	10	13	13	13
0821303541	69	54.5	3	50	20	6.4	10	13	13	13
0821303542	69	54.5	3	50	20	6.4	10	13	13	13
0821303543	69	54.5	3	50	20	6.4	10	13	13	13
0821303544	69	54.5	3	50	20	6.4	10	13	13	13
0821303545	69	54.5	3	50	20	6.4	10	13	13	13

Part No.	T7	U	V	W	W1	X
0821303500	8.5	33	18	199	67	3
0821303501	8.5	33	18	199	67	3
0821303502	8.5	33	18	199	67	3
0821303503	8.5	33	18	199	67	3
0821303504	8.5	33	18	199	67	3
0821303505	8.5	33	18	199	67	3
0821303540	8.5	33	18	199	67	3
0821303541	8.5	33	18	199	67	3
0821303542	8.5	33	18	199	67	3
0821303543	8.5	33	18	199	67	3
0821303544	8.5	33	18	199	67	3
0821303545	8.5	33	18	199	67	3