Pre-filter, Series NL4-FLP

0821303303

2024-04-24

AVENTICS Series NL4 Air Preparation Units

The AVENTICS Series NL maintenance units are suitable for all areas: as individual components or as assembled maintenance units, for centralized or decentralized compressed air preparation, in compact or powerful versions, for use in high or low temperatures. This line offers a complete, customizable compressed air preparation technology. It includes an option to combine every component in the Series to achieve the desired function, making it possible to adjust the components precisely to the application requirements.





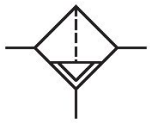

Technical data

Industry	Industrial
Parts	Pre-filter
Reservoir	reservoir, metal, long, without inspection glass
Port	G 1/4
Filter porosity	0.3 µm
Nominal flow Qn	2500 l/min
Condensate drain	fully automatic, open without pressure
Min. working pressure	1.5 bar
Max. working pressure	16 bar
Min. ambient temperature	-10 °C
Max. ambient temperature	60 °C
Medium	Compressed air Neutral gases
Max. achievable compressed air class acc. to ISO 8573-1:2010	2 : - : 3
Filter reservoir volume	25 cm³
Filter element	exchangeable
Recommended pre-filtering	5 µm
Weight	0.886 kg
Mounting orientation	vertical

Pre-filter, Series NL4-FLP

2024-04-24

0821303303

Type	Can be assembled into blocks

Material

Housing material	Die cast zinc
Material front plate	Acrylonitrile butadiene styrene
Seal material	Acrylonitrile butadiene rubber
Material reservoir	Die cast zinc
Material filter insert	Impregnated paper
Part No.	0821303303

Technical information

The pressure dew point must be at least 15 °C less than ambient and medium temperature and may not exceed 3 °C.

Note: Polycarbonate reservoirs are susceptible to solvents, supplementary information can be found at "Customer information".

A change in the flow direction (from air supply on the left to air supply on the right) occurs by rotating installation by 180° about the vertical axis. Please see the operating instructions for further details.

Nominal flow Qn with secondary pressure p2 = 6 bar at Δp = 0,1 bar

Pre-filter, Series NL4-FLP

2024-04-24

0821303303

Dimensions

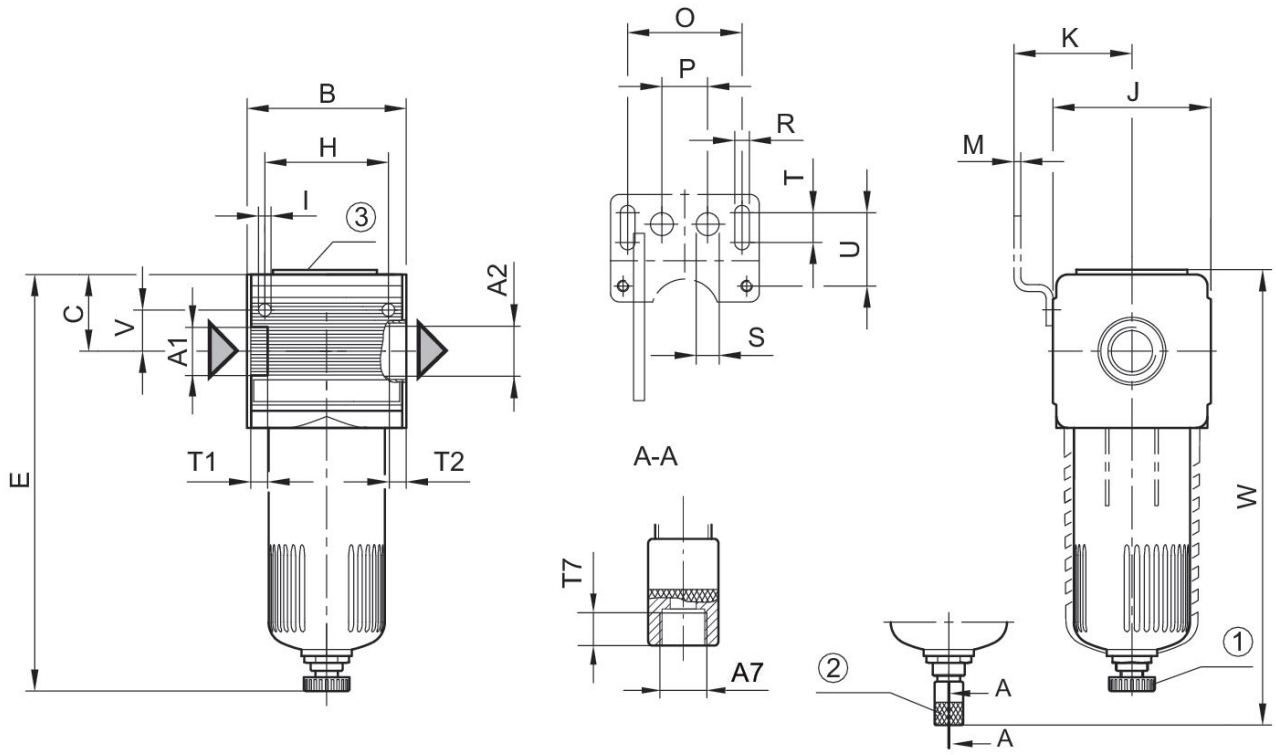

A1 = input A2 = output
A7 = condensate drain
1) semi-automatic condensate drain 2) fully automatic condensate drain 3) differential pressure gauge connection

Dimensions in mm

Part No.	A1	A2	A7	B	C	E	H	I	J
0821303302	G 1/4	G 1/4	G 1/8	69.6	38.5	–	54	5.5	69
0821303303	G 1/4	G 1/4	G 1/8	69.6	38.5	–	54	5.5	69
0821303515	G 1/2	G 1/2	G 1/8	69.6	38.5	–	54	5.5	69
0821303529	G 1/2	G 1/2	G 1/8	69.6	38.5	185	54	5.5	69

Part No.	K	M	O	P	R	S	T	T1	T2
0821303302	54.5	3	50	20	6.4	10	13	13	13
0821303303	54.5	3	50	20	6.4	10	13	13	13
0821303515	54.5	3	50	20	6.4	10	13	13	13
0821303529	54.5	3	50	20	6.4	10	13	13	13

Part No.	T7	U	V	W
0821303302	8.5	33	18	203
0821303303	8.5	33	18	232
0821303515	8.5	33	18	317
0821303529	8.5	33	18	–

Flow rate characteristic, p2 = 0,05 - 7 bar

Fig. 1

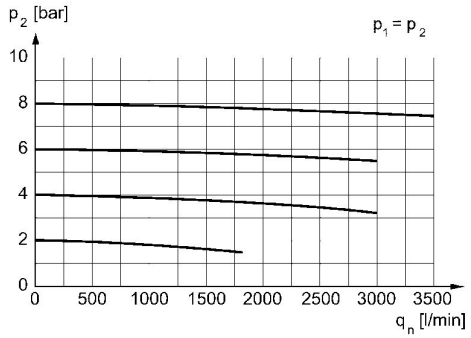

p2 = secondary pressure qn = nominal flow

Flow rate characteristic, p2 = 0,05 - 7 bar

Fig. 2

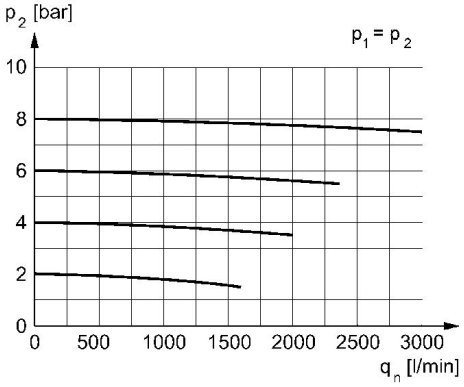

p2 = secondary pressure qn = nominal flow