Pressure regulator, Series NL1-RGS

0821302711

AVENTICS Series NL1 Air Preparation Units

The AVENTICS Series NL maintenance units are suitable for all areas: as individual components or as assembled maintenance units, for centralized or decentralized compressed air preparation, in compact or powerful versions, for use in high or low temperatures. This line offers a complete, customizable compressed air preparation technology. It includes an option to combine every component in the Series to achieve the desired function, making it possible to adjust the components precisely to the application requirements.





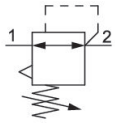

Technical data

Industry	Industrial
Function	Pressure regulator, high flow rate
Parts	Pressure regulator
Pressure gauge	without pressure gauge
Mounting orientation	Any
Regulator type	Diaphragm-type pressure regulator
Port	G 1/4
Nominal flow Qn	1350 l/min
Min. regulation range	0.1 bar
Max. regulation range	3 bar
Min. working pressure	0.5 bar
Max. working pressure	16 bar
Min. ambient temperature	-10 °C
Max. ambient temperature	60 °C
Activation	Mechanical
Regulator function	with relieving air exhaust
Regulator type	Can be assembled into blocks
Pressure supply	single
Medium	Compressed air Neutral gases

Recommended pre-filtering	5 µm
Weight	0.26 kg

Material

Housing material	Die cast zinc
Seal material	Acrylonitrile butadiene rubber
Part No.	0821302711

Technical information

The pressure dew point must be at least 15 °C less than ambient and medium temperature and may not exceed 3 °C.

Nominal flow Qn with secondary pressure p2 = 6 bar at Δp = 1 bar

A change in the flow direction (from air supply on the left to air supply on the right) occurs by rotating installation by 180° about the vertical axis. Please see the operating instructions for further details.

The rear pressure gauge connection on the pressure regulator is closed with a blanking plug, the front connection is open. Depending on the customer application, a second blanking plug may be necessary. Please order separately (see accessories).

Relieving exhaust (≤ 0.3 bar over set pressure)

With rear exhaust (>3 bar)

Dimensions

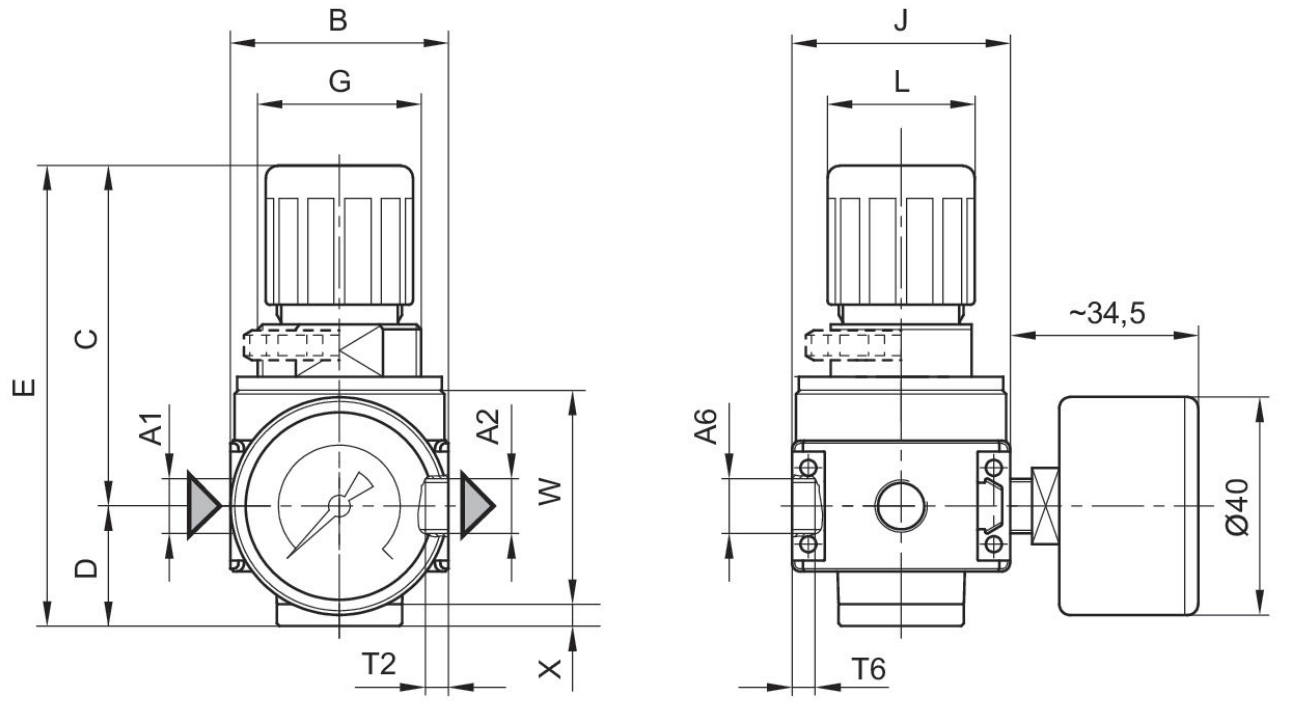

A1 = input
A2 = output
A6 = ventilation port

Dimensions in mm

Part No.	A1	A2	A6	B	C	D	E	G	J
0821302708	G 1/8	G 1/8	G 1/8	40	62.5	22	84.5	M30x1,5	40
0821302709	G 1/8	G 1/8	G 1/8	40	62.5	22	84.5	M30x1,5	40
0821302710	G 1/8	G 1/8	G 1/8	40	62.5	22	84.5	M30x1,5	40
0821302705	G 1/8	G 1/8	G 1/8	40	62.5	22	84.5	M30x1,5	40
0821302706	G 1/8	G 1/8	G 1/8	40	62.5	22	84.5	M30x1,5	40
0821302707	G 1/8	G 1/8	G 1/8	40	62.5	22	84.5	M30x1,5	40
0821302714	G 1/4	G 1/4	G 1/8	40	62.5	22	84.5	M30x1,5	40
0821302715	G 1/4	G 1/4	G 1/8	40	62.5	22	84.5	M30x1,5	40
0821302716	G 1/4	G 1/4	G 1/8	40	62.5	22	84.5	M30x1,5	40
0821302711	G 1/4	G 1/4	G 1/8	40	62.5	22	84.5	M30x1,5	40
0821302712	G 1/4	G 1/4	G 1/8	40	62.5	22	84.5	M30x1,5	40
0821302713	G 1/4	G 1/4	G 1/8	40	62.5	22	84.5	M30x1,5	40

Part No.	L	T2	T6	W	X
0821302708	27	8	6	39.5	4
0821302709	27	8	6	39.5	4
0821302710	27	8	6	39.5	4
0821302705	27	8	6	39.5	4
0821302706	27	8	6	39.5	4

Part No.	L	T2	T6	W	X
0821302707	27	8	6	39.5	4
0821302714	27	8	6	39.5	4
0821302715	27	8	6	39.5	4
0821302716	27	8	6	39.5	4
0821302711	27	8	6	39.5	4
0821302712	27	8	6	39.5	4
0821302713	27	8	6	39.5	4

Pressure characteristics curve

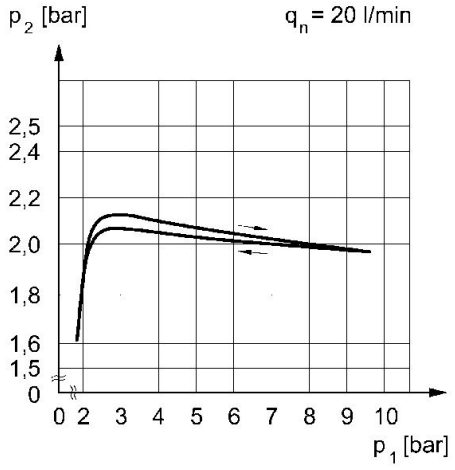

p1 = Working pressure
p2 = Secondary pressure
qn = Nominal flow

Flow rate characteristic (setting range p2: 0.5 - 10 bar)

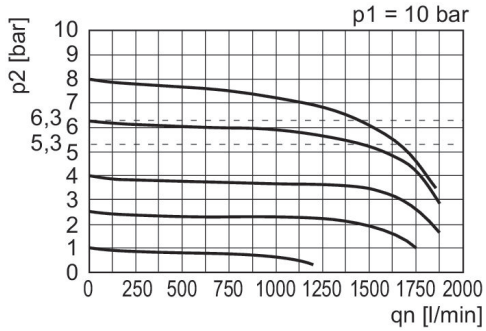

p1 = Working pressure
p2 = Secondary pressure
qn = Nominal flow