# Pressure regulator, Series NL1-RGS

**0821302707**



## AVENTICS Series NL1 Air Preparation Units

The AVENTICS Series NL maintenance units are suitable for all areas: as individual components or as assembled maintenance units, for centralized or decentralized compressed air preparation, in compact or powerful versions, for use in high or low temperatures. This line offers a complete, customizable compressed air preparation technology. It includes an option to combine every component in the Series to achieve the desired function, making it possible to adjust the components precisely to the application requirements.





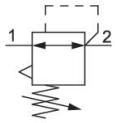


## Technical data

| | |
|---|---|
| Industry | Industrial |
| Function | Pressure regulator, high flow rate |
| Parts | Pressure regulator |
| Pressure gauge | without pressure gauge |
| Mounting orientation | Any |
| Regulator type | Diaphragm-type pressure regulator |
| Port | G 1/8 |
| Nominal flow Qn | 1350 l/min |
| Min. regulation range | 0.5 bar |
| Max. regulation range | 10 bar |
| Min. working pressure | 0.5 bar |
| Max. working pressure | 16 bar |
| Min. ambient temperature | -10 °C |
| Max. ambient temperature | 60 °C |
| Activation | Mechanical |
| Regulator function | with relieving air exhaust |
| Regulator type | Can be assembled into blocks |
| Pressure supply | single |
| Medium | Compressed air<br>Neutral gases |

| | |
|---|---|
| Recommended pre-filtering | 5 µm |
| Weight | 0.26 kg |

## Material

| | |
|---|---|
| Housing material | Die cast zinc |
| Seal material | Acrylonitrile butadiene rubber |
| Part No. | 0821302707 |

## Technical information

The pressure dew point must be at least 15 °C less than ambient and medium temperature and may not exceed 3 °C.

Nominal flow Qn with secondary pressure p2 = 6 bar at Δp = 1 bar

A change in the flow direction (from air supply on the left to air supply on the right) occurs by rotating installation by 180° about the vertical axis. Please see the operating instructions for further details.

The rear pressure gauge connection on the pressure regulator is closed with a blanking plug, the front connection is open. Depending on the customer application, a second blanking plug may be necessary. Please order separately (see accessories).

Relieving exhaust (≤ 0.3 bar over set pressure)

With rear exhaust (>3 bar)

## Dimensions

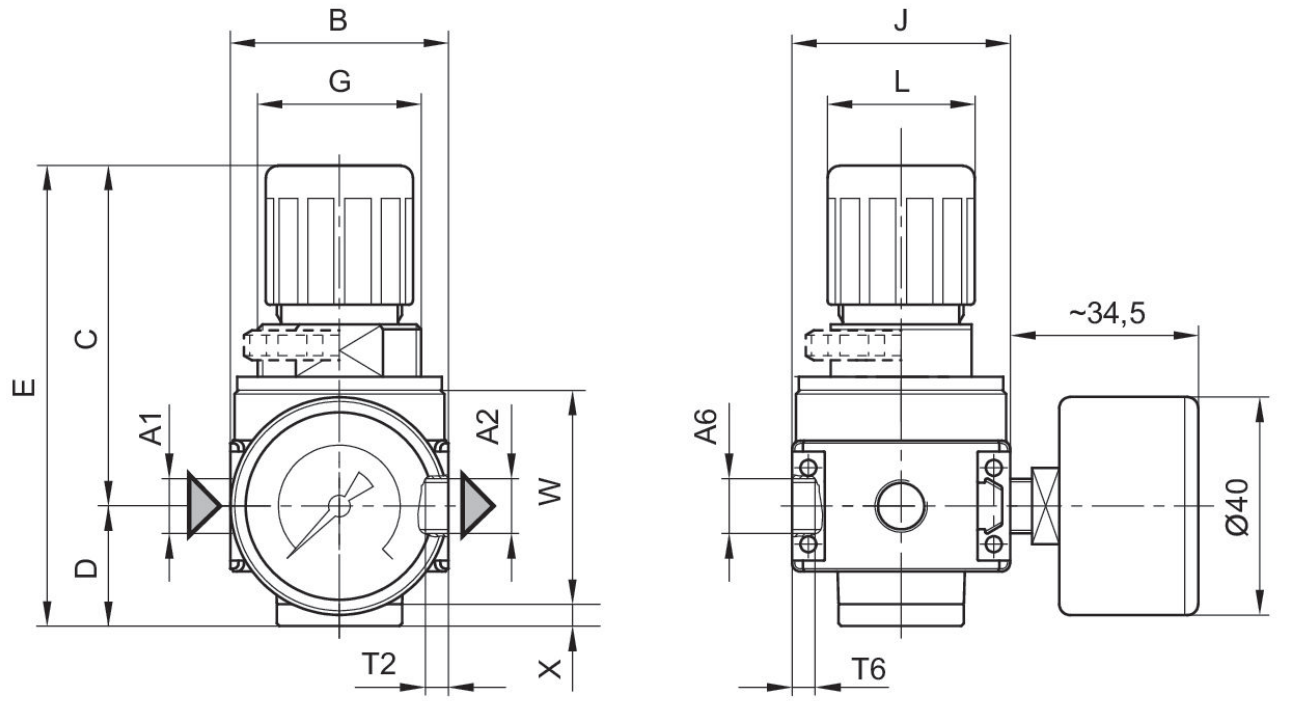


A1 = input
A2 = output
A6 = ventilation port

## Dimensions in mm

| Part No. | A1 | A2 | A6 | B | C | D | E | G | J |
|---|---|---|---|---|---|---|---|---|---|
| 0821302708 | G 1/8 | G 1/8 | G 1/8 | 40 | 62.5 | 22 | 84.5 | M30x1,5 | 40 |
| 0821302709 | G 1/8 | G 1/8 | G 1/8 | 40 | 62.5 | 22 | 84.5 | M30x1,5 | 40 |
| 0821302710 | G 1/8 | G 1/8 | G 1/8 | 40 | 62.5 | 22 | 84.5 | M30x1,5 | 40 |
| 0821302705 | G 1/8 | G 1/8 | G 1/8 | 40 | 62.5 | 22 | 84.5 | M30x1,5 | 40 |
| 0821302706 | G 1/8 | G 1/8 | G 1/8 | 40 | 62.5 | 22 | 84.5 | M30x1,5 | 40 |
| 0821302707 | G 1/8 | G 1/8 | G 1/8 | 40 | 62.5 | 22 | 84.5 | M30x1,5 | 40 |
| 0821302714 | G 1/4 | G 1/4 | G 1/8 | 40 | 62.5 | 22 | 84.5 | M30x1,5 | 40 |
| 0821302715 | G 1/4 | G 1/4 | G 1/8 | 40 | 62.5 | 22 | 84.5 | M30x1,5 | 40 |
| 0821302716 | G 1/4 | G 1/4 | G 1/8 | 40 | 62.5 | 22 | 84.5 | M30x1,5 | 40 |
| 0821302711 | G 1/4 | G 1/4 | G 1/8 | 40 | 62.5 | 22 | 84.5 | M30x1,5 | 40 |
| 0821302712 | G 1/4 | G 1/4 | G 1/8 | 40 | 62.5 | 22 | 84.5 | M30x1,5 | 40 |
| 0821302713 | G 1/4 | G 1/4 | G 1/8 | 40 | 62.5 | 22 | 84.5 | M30x1,5 | 40 |

| Part No. | L | T2 | T6 | W | X |
|---|---|---|---|---|---|
| 0821302708 | 27 | 8 | 6 | 39.5 | 4 |
| 0821302709 | 27 | 8 | 6 | 39.5 | 4 |
| 0821302710 | 27 | 8 | 6 | 39.5 | 4 |
| 0821302705 | 27 | 8 | 6 | 39.5 | 4 |
| 0821302706 | 27 | 8 | 6 | 39.5 | 4 |

# Pressure regulator, Series NL1-RGS

0821302707

| Part No. | L | T2 | T6 | W | X |
|---|---|---|---|---|---|
| 0821302707 | 27 | 8 | 6 | 39.5 | 4 |
| 0821302714 | 27 | 8 | 6 | 39.5 | 4 |
| 0821302715 | 27 | 8 | 6 | 39.5 | 4 |
| 0821302716 | 27 | 8 | 6 | 39.5 | 4 |
| 0821302711 | 27 | 8 | 6 | 39.5 | 4 |
| 0821302712 | 27 | 8 | 6 | 39.5 | 4 |
| 0821302713 | 27 | 8 | 6 | 39.5 | 4 |

## Pressure characteristics curve

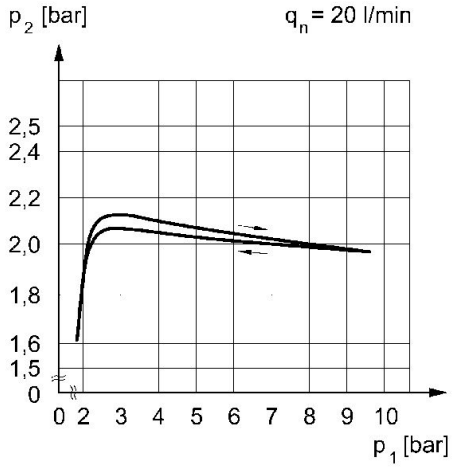


p1 = Working pressure
p2 = Secondary pressure
qn = Nominal flow

## Flow rate characteristic (setting range p2: 0.5 - 10 bar)

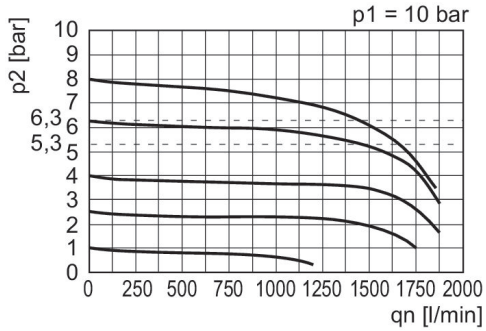


p1 = Working pressure
p2 = Secondary pressure
qn = Nominal flow