# 2/2-directional valve, Series AP

**0820404023**



## Series AP Directional valves

The AVENTICS Series AP offers a wide range of poppet valves with aluminium housing. With many actuation control versions available (roller, lever, pedal, push-button or plunger) the AP Series is the universal solution for automation systems and panel installation.

- Light and robust valves
- Various mechanical actuating controls
- panel installation



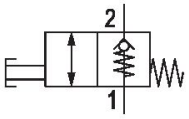


## Technical data

| | |
|---|---|
| Industry | Industrial |
| Activation | Mechanical |
| Valve type | Poppet valve |
| Switching principle | 2/2, with spring return |
| Plate connection | Pipe connection |
| Actuating element | Push button |

| | |
|---|---|
| Compressed air connection type | Internal thread |
| Compressed air connection input | G 1/8 |
| Compressed air connection output | G 1/8 |
| Nominal flow Qn | 350 l/min |
| Min. working pressure | 0 bar |
| Max. working pressure | 10 bar |
| Min. ambient temperature | -30 °C |
| Max. ambient temperature | 80 °C |
| Min. medium temperature | -30 °C |
| Max. medium temperature | 80 °C |
| Medium | Compressed air |
| Min. oil content of compressed air | 0 mg/m³ |

| | |
|---|---|
| Max. oil content of compressed air | 5 mg/m³ |
| Max. particle size | 5 µm |
| Weight | 0.075 kg |

## Material

| | |
|---|---|
| Housing material | Aluminum |
| Seal material | Acrylonitrile butadiene rubber |
| Material actuating control | Polyamide |
| Part No. | 0820404023 |

## Technical information

The min. control pressure must be adhered to, since otherwise faulty switching and valve failure may result!

The pressure dew point must be at least 15 °C less than ambient and medium temperature and may not exceed 3 °C.

The oil content of compressed air must remain constant during the life cycle.

Use only the approved oils from AVENTICS. Further information can be found in the “Technical information” document (available in https://www.emerson.com/en-us/support).

Nominal flow Qn at 6 bar and Δp = 1 bar

## Dimensions in mm

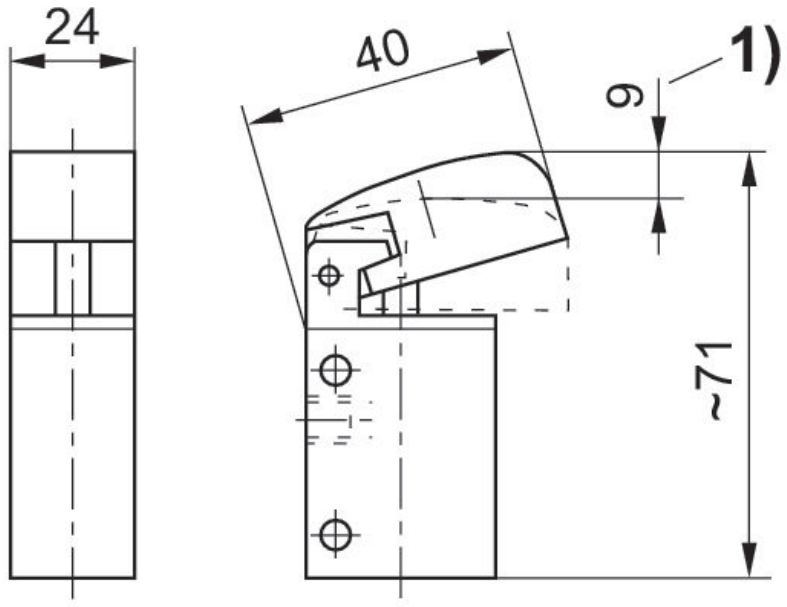


1) Actuating stroke

## Actuating force+

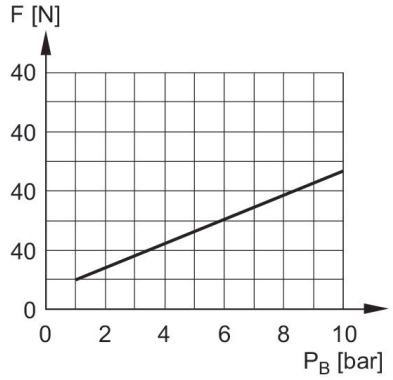


F = actuating force
$P_B$ = Working pressure