5/2-directional valve, Series ST

0820403010

- Stainless steel housing
- Metal to metal sealing
- Various mechanical actuating controls available
- panel installation

AVENTICS Series ST Directional valves

The AVENTICS Series ST offers a comprehensive range of spool valves with hardened stainless steel housing. The metal sealing system ensures their extended service life independent of the air quality. Its electrical, pneumatic, or mechanical actuating controls (roller, lever, pedal, push-button or plunger) make the ST Series ideal for demanding industry applications and panel installation.



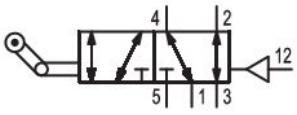

Technical data

Industry	Industrial
Activation	Mechanical
Type	with air return
Valve type	Spool valve
Switching principle	5/2, with air spring return
Actuating control	Single Solenoid
Plate connection	Pipe connection
Actuating element	Roller lever, one-way trip
Sealing principle	metal/metal sealing
Lock type	not lockable

Compressed air connection type	Internal thread
Compressed air connection input	G 1/8
Compressed air connection output	G 1/8
Compressed air connection, exhaust	G 1/8
Nominal flow Qn	280 l/min
Min. working pressure	-0.95 bar
Max. working pressure	10 bar
Min. control pressure	2 bar

Max. control pressure	10 bar
Min. actuating force	3 N
Min. ambient temperature	-15 °C
Max. ambient temperature	80 °C
Min. medium temperature	-15 °C
Max. medium temperature	80 °C
Medium	Compressed air
Min. oil content of compressed air	5 mg/m³
Max. oil content of compressed air	25 mg/m³
Max. particle size	5 µm

Mounting screw	M4 with hexagon socket
Mounting screw tightening torque	2.5 Nm
Weight	0.23 kg

Material

Housing material	Stainless Steel
Surface housing	hardened
Seal material	Acrylonitrile butadiene rubber
Material, front cover	Steel, chrome-plated
Material threaded bushing	Brass
Material actuating control	Polyoxymethylene
Part No.	0820403010

Technical information

Notice: This product may only be operated with oiled compressed air.

Nominal flow Qn at 6 bar and Δp = 1 bar

The min. control pressure must be adhered to, since otherwise faulty switching and valve failure may result!

The pressure dew point must be at least 15 °C less than ambient and medium temperature and may not exceed 3 °C.

The oil content of compressed air must remain constant during the life cycle.

Use only the approved oils from AVENTICS. Further information can be found in the “Technical information” document (available in https://www.emerson.com/en-us/support).

Dimensions in mm

Basic valve

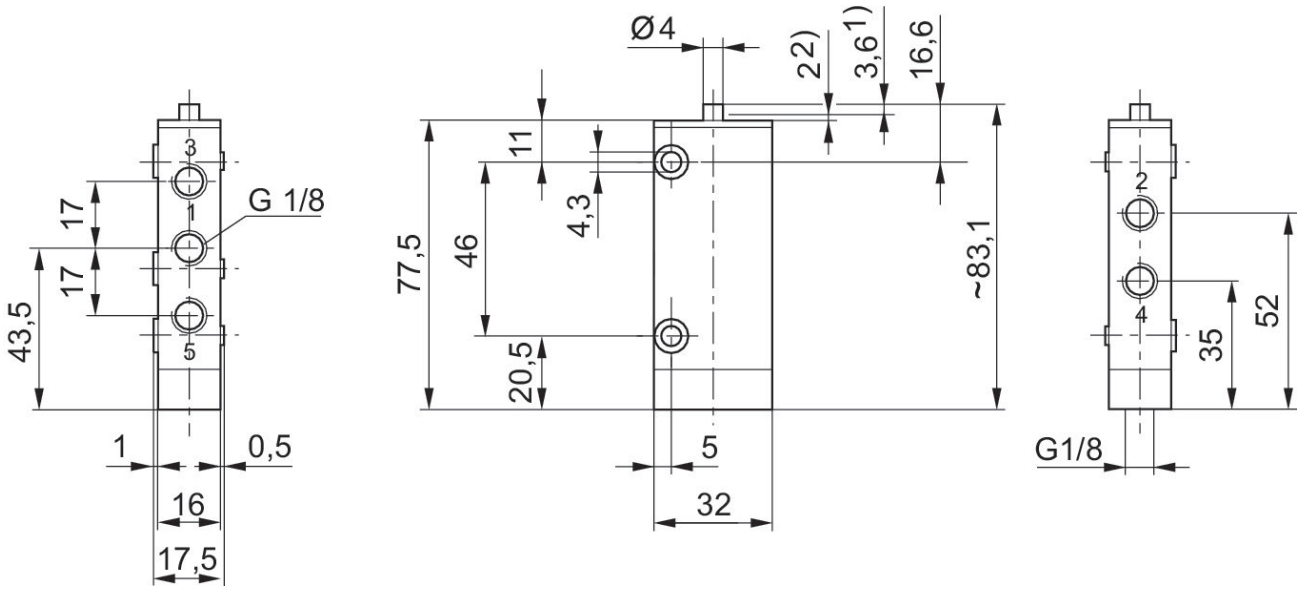

1) Actuating stroke
2) Overstroke
Mounting via 2 through-holes in housingnozzle and tubing, not included in scope of delivery
Dimensions of basic valve apply to all types of actuation.

Dimensions in mm

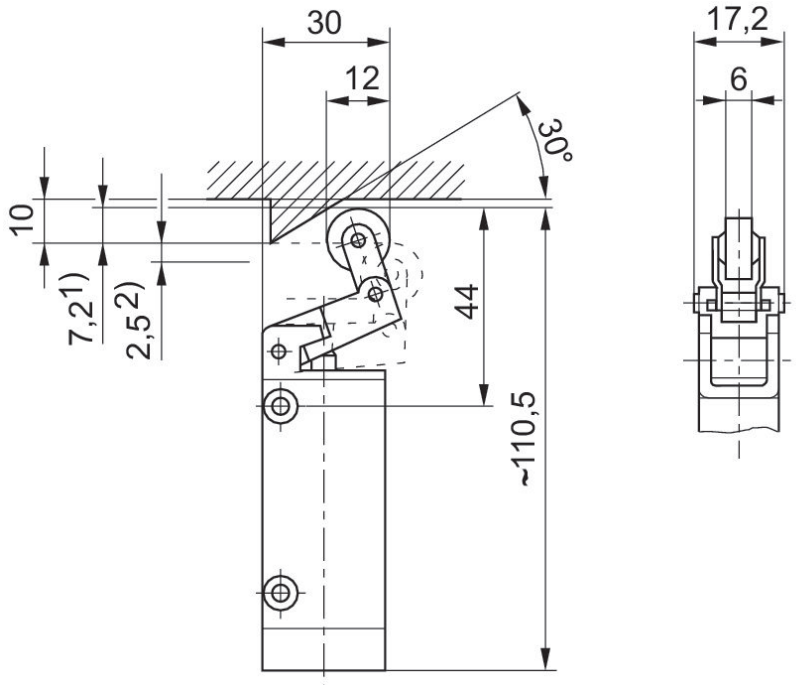

1) Actuating stroke
2) Overstroke
Mounting via 2 through-holes in housingnozzle and tubing, not included in scope of delivery

Actuating force+

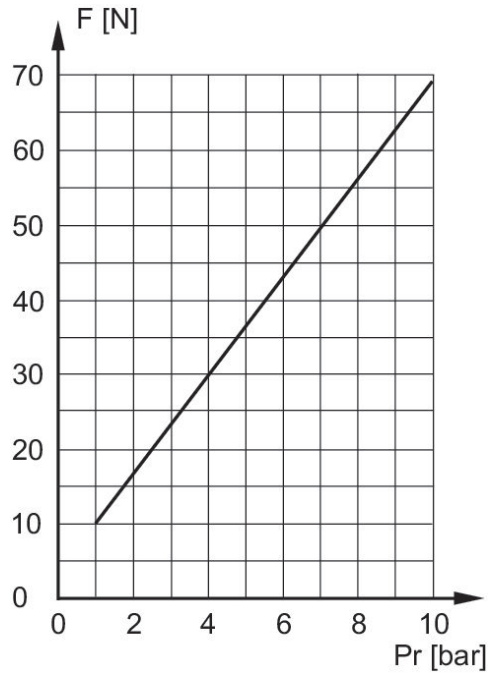

F = actuating force
Pr = return pressure