# 3/2-directional valve, Series ST

**0820402017**



- Stainless steel housing
- Metal to metal sealing
- Various mechanical actuating controls available
- panel installation

## AVENTICS Series ST Directional valves

The AVENTICS Series ST offers a comprehensive range of spool valves with hardened stainless steel housing. The metal sealing system ensures their extended service life independent of the air quality. Its electrical, pneumatic, or mechanical actuating controls (roller, lever, pedal, push-button or plunger) make the ST Series ideal for demanding industry applications and panel installation.

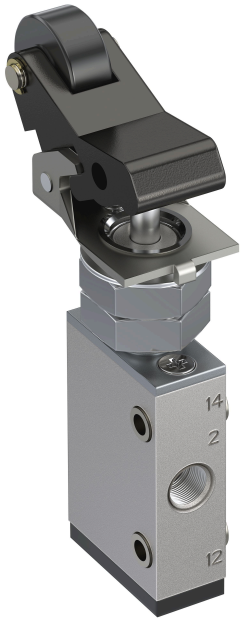


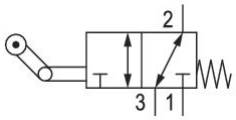


## Technical data

| | |
|---|---|
| Industry | Industrial |
| Activation | Mechanical |
| Valve type | Spool valve |
| Switching principle | 3/2, with spring return |
| Actuating control | Single Solenoid |
| Plate connection | Pipe connection |
| Actuating element | Roller with articulated lever |
| Sealing principle | metal/metal sealing |
| Lock type | not lockable |

| | |
|---|---|
| Compressed air connection type | Internal thread |
| Compressed air connection input | G 1/8 |
| Compressed air connection output | G 1/8 |
| Compressed air connection, exhaust | G 1/8 |
| Nominal flow Qn | 280 l/min |
| Min. working pressure | -0.95 bar |
| Max. working pressure | 10 bar |
| Min. actuating force | 25 N |
| Min. ambient temperature | -15 °C |

| | |
|---|---|
| Max. ambient temperature | 80 °C |
| Min. medium temperature | -15 °C |
| Max. medium temperature | 80 °C |
| Medium | Compressed air |
| Min. oil content of compressed air | 5 mg/m³ |
| Max. oil content of compressed air | 25 mg/m³ |
| Max. particle size | 5 µm |

| | |
|---|---|
| Mounting screw | M4 with hexagon socket |
| Mounting screw tightening torque | 2.5 Nm |
| Weight | 0.29 kg |

## Material

| | |
|---|---|
| Housing material | Stainless Steel |
| Surface housing | hardened |
| Material, front cover | Aluminum |
| Material actuating control | Polyoxymethylene |
| Part No. | 0820402017 |

## Technical information

Notice: This product may only be operated with oiled compressed air.

Nominal flow Qn at 6 bar and Δp = 1 bar

The min. control pressure must be adhered to, since otherwise faulty switching and valve failure may result!

The pressure dew point must be at least 15 °C less than ambient and medium temperature and may not exceed 3 °C.

The oil content of compressed air must remain constant during the life cycle.

Use only the approved oils from AVENTICS. Further information can be found in the “Technical information” document (available in https://www.emerson.com/en-us/support).

## Dimensions in mm

## Basic valve

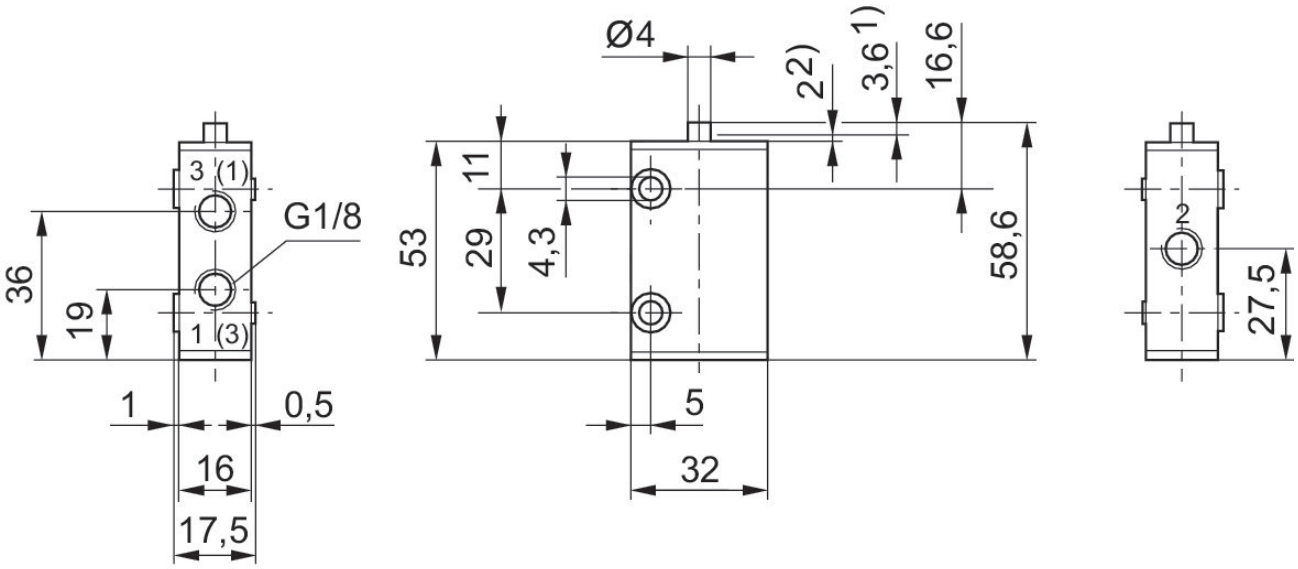


1) Actuating stroke
2) Overstroke
Cconnection via 2 through-holes in housing.
Dimensions of basic valve apply to all types of actuation.

## Dimensions in mm

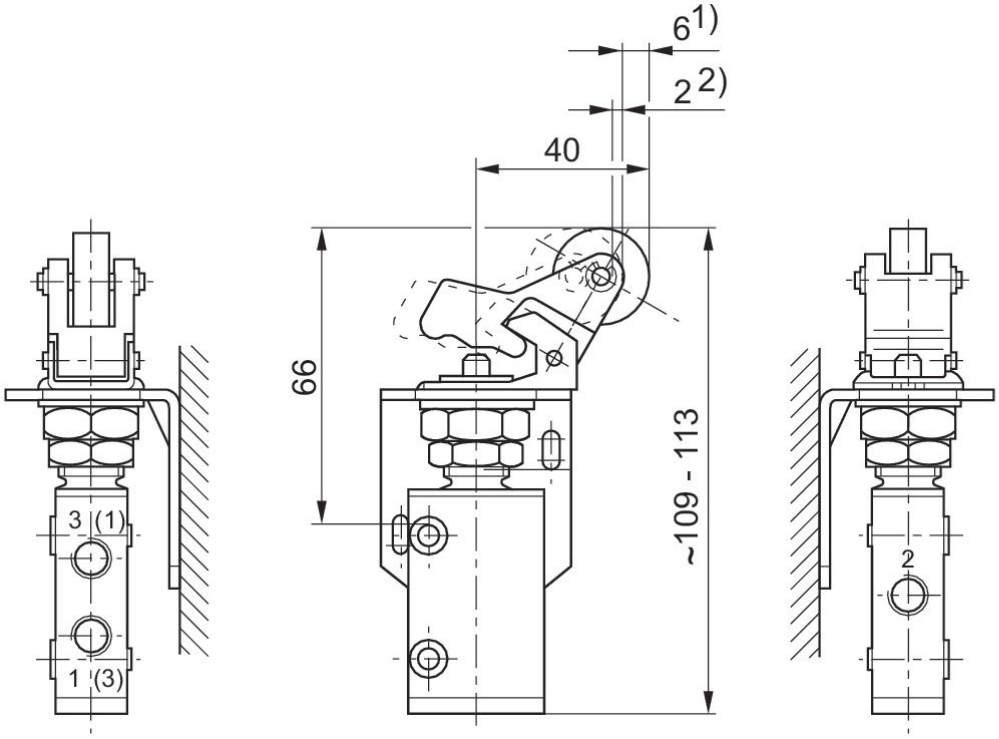


1) Actuating stroke
2) Overstroke
Can be adjusted by 90°, thereby providing 4 different angles of approach.

## Angle of approach

